INTERNATIONAL ENERGY AGENCY

CO_2 CAPTURE READY PLANTS

Technical Study

Report Number: 2007/4

Date: May 2007

In support of the G8 Plan of Action

This document has been prepared for the Executive Committee of the IEA GHG Programme.
It is not a publication of the Operating Agent, International Energy Agency or its Secretariat.

INTERNATIONAL ENERGY AGENCY

The International Energy Agency (IEA) was established in 1974 within the framework of the Organisation for Economic Co-operation and Development (OECD) to implement an international energy programme. The IEA fosters co-operation amongst its 26 member countries and the European Commission, and with the other countries, in order to increase energy security by improved efficiency of energy use, development of alternative energy sources and research, development and demonstration on matters of energy supply and use. This is achieved through a series of collaborative activities, organised under more than 40 Implementing Agreements. These agreements cover more than 200 individual items of research, development and demonstration. The IEA Greenhouse Gas R&D Programme is one of these Implementing Agreements.

DISCLAIMER

COPYRIGHT

ACKNOWLEDGEMENTS AND CITATIONS

This report describes research sponsored by the IEA Greenhouse Gas R&D Programme. This report was prepared by:

E.ON-UK
Power Technology
Ratcliffe-on-Soar
Nottingham, NG11 0EE
UK

Doosan Babcock
Porterfield Road
Renfrew, PA4 8DJ
UK

Imperial College
South Kensington Campus
London, SW7 2BX
UK

The principal researchers were:

- Robin Irons, E.ON, UK
- Gnanapandithan Sekkappan, Doosan Babcock, UK
- Raghbir Panesar, Doosan Babcock, UK
- Jon Gibbins, Imperial College London, UK
- Mathieu Lucquiaud, Imperial College London, UK

The IEA GHG manager for this report was: John Davison

The expert reviewers for this report were:

- Kamel Bennaceur, IEA Secretariat, France
- Sankar Bhattacharya, IEA Secretariat, France
- Hannah Chalmers, Imperial College London, UK
- Jared Ciferno, NETL, USA
- Phil Evans, RWE Npower, UK
- Paul Feron, TNO I&T, Netherlands
- Neil Hirst, IEA Secretariat, France
- Antonio Pfluger, IEA Secretariat, France
- Glen Jukkola, Alstom, USA
- Erik Lysen, University of Utrecht, Netherlands
- Brian Ricketts, IEA Secretariat, France

Some of these reviewers also obtained and coordinated comments from their colleagues.

The report should be cited in literature as follows:

IEA Greenhouse Gas R&D Programme (IEA GHG), "CO_2 capture ready plants", 2007/4, May 2007.

Further information or copies of the report can be obtained by contacting the IEA GHG Programme at:

IEA Greenhouse R&D Programme, Orchard Business Centre, Stoke Orchard, Cheltenham, Glos., GL52 7RZ, UK
Tel: +44 1242 680753 Fax: +44 1242 680758
E-mail: mail@ieaghg.org
www.ieagreen.org.uk

Foreword

At the Gleneagles Summit in July 2005, the G8 Leaders addressed the challenge of tackling climate change, promoting clean energy, achieving sustainable development and ensuring energy security. The outcome of the Summit had major implications for the IEA mission in relation to climate change and sustainable energy development, and particularly in relation to energy technology and energy efficiency.

Carbon dioxide capture and storage (CCS) is a key climate change mitigation option for the future. At Gleneagles, the G8 Leaders committed to "*work to accelerate the development and commercialization of carbon capture and storage technology*'. The G8 Summit in Heiligendamm in 2007 confirmed this statement.

The IEA Secretariat supports development and deployment of the CCS via its analytical work and policy advice provided to member governments. The Secretariat closely co-operates in this area with the IEA Greenhouse Gas R&D Programme, which has for a number of years, analysed different aspects of CCS collaborating with both governments and industry and evaluated technology options from the components of the CCS chain.

One of the aspects analysed is a relatively new concept of making new power plants "capture (and storage) ready" for future retrofit with CCS. Without "capture readiness", every new power plant built would lock in high CO2 emissions for a generation to come. There is an urgent need to define the criteria for ensuring that new coal-fired plants, especially those burning pulverised coal, will be "capture ready".

What are the practical options for achieving "capture readiness"? What do they cost, and what are the economics of installing capture ready features during construction, versus waiting for the retrofit of full CCS? This study provides the best available answers to these important questions, based on in-depth engineering and cost analysis of the key coal combustion technologies.

The study was sponsored by the IEA Greenhouse Gas R&D Programme. It will be followed by policy recommendations to be issued by the IEA Secretariat early 2008. Both documents will be delivered to the G8 Summit in Japan in 2008.

Hereby, I would like to acknowledge the input to the G8 process provided by the IEA Greenhouse Gas R&D Programme with this report. I appreciate the timely response to the G8 request and high quality of this report.

Nobuo Tanaka
Executive Director
International Energy Agency

CO_2 CAPTURE READY PLANTS

Background

In order to maintain power supplies, industry worldwide needs to replace large quantities of power generation plant that has reached the end of its useful life. It is also expected that a significant quantity of extra capacity will be required in some rapidly growing economies. In the reference scenario of the IEA's 2006 World Energy Outlook 5087 GW of new and replacement power plant, mostly using fossil fuels, is projected to be built between 2005 and 2030.

Coal represents an attractive option for new-build plant due to the high price of oil and gas, coal's relatively stable price and the fact that coal is available as an indigenous fuel in markets such as China, India and the USA, where many of the power plant are likely to be built. In the IEA's reference scenario, coal fired generation capacity is projected to increase from 1235 GW in 2004 to 2565 GW in 2030. However, international political pressure is growing to reduce anthropogenic carbon dioxide emissions since they are linked to concerns about global warming. There is a fear that if many new fossil fuel power plants are built worldwide with no option for CO_2 abatement, then a large amount of CO_2 emission to the atmosphere will be 'locked-in', since such plants may well have an operational life of forty years or more.

CO_2 can be captured from fossil fuel fired power plants but it is not currently economically feasible to build power plants fitted with CO_2 capture. The concept of a 'capture ready' power plant therefore comes into being. A capture ready plant is a plant which can be retrofitted with CO_2 capture when the necessary regulatory or economic drivers are in place.

Policy measures could be introduced to persuade developers to make their plants capture ready. These could include a legal requirement or incentives based on a definition of what is needed to qualify a plant as capture ready. Even without such a requirement, plant developers may still choose to build their plants capture ready, if there is a reasonable expectation that future regulatory requirements or market prices of CO_2 emission credits will make the additional investment worthwhile, to reduce the costs of future capture retrofit or to avoid the need to prematurely shut down plants. Detailed consideration of policy measures is beyond the scope of this study but the IEA Secretariat will use this report as input to a study on capture ready policy measures which it will report at the G8 meeting in Japan in 2008.

Study description

The IEA Greenhouse Gas R&D Programme (IEA GHG) has employed a contractor, E.ON UK, in collaboration with Doosan Babcock and Imperial College London, to undertake a study on capture ready power plants. This study provides:

- A summary of capture ready power plant considerations.
- A review of published work on capture ready plants.
- Assessment of the options for capture ready pre-investments at power plants.
- Discussion of the risks and uncertainties associated with pre-investments.
- Estimation of the impacts of pre-investments on capital and operating costs.
- Assessment of the trade-off between pre-investment and subsequent savings.

The study concentrates on coal fired plants, including pulverised coal combustion (PC) plants and integrated gasification combined cycle (IGCC) plants. Natural gas fired combined cycle plants are also discussed briefly. The study assesses the three leading CO_2 capture technologies, namely post-combustion, pre-combustion and oxy-combustion capture.

The study focuses on power plants but many of the more general conclusions would be applicable to other fossil fuel processing and utilisation plants. Recent increases in oil prices and a desire to increase indigenous oil production have led to increased interest in coal-to-liquids (CTL) plants. These plants are beyond the scope of this study but a brief discussion of their capture ready issues is included in this overview, at the request of the IEA Secretariat.

Results and Discussion

Summary of capture ready power plant considerations
IEA GHG and the study contractors have produced the following 'headline' summary of capture ready considerations for power plants:

A CO_2 capture ready power plant is a plant which can include CO_2 capture when the necessary regulatory or economic drivers are in place. The aim of building plants that are capture ready is to reduce the risk of stranded assets and 'carbon lock-in'.

Developers of capture ready plants should take responsibility for ensuring that all known factors in their control that would prevent installation and operation of CO_2 capture have been identified and eliminated.

This might include:

- *A study of options for CO_2 capture retrofit and potential pre-investments*
- *Inclusion of sufficient space and access for the additional facilities that would be required*
- *Identification of reasonable route(s) to storage of CO_2*

Competent authorities involved in permitting power plants should be provided with sufficient information to be able to judge whether the developer has met these criteria.

Plant space and access requirements
Space would need to be provided for the CO_2 capture equipment (scrubbers, CO_2 compressors, oxygen production plant etc.), additional infrastructure including cooling water and electrical systems, safety barrier zones, pipework and tie-ins to existing equipment. Further space may be needed during construction, for storage of equipment and materials and for access to the existing plant.

Retrofitting CO_2 capture would reduce the net power output, for example by about 20-25% for current post-combustion capture technology at a coal fired plant. If the net power output from the site had to be maintained, space would also have to be provided for construction of additional power generation plant.

Routes to CO_2 storage
CO_2 would have to be transported from the capture plant to a storage injection site. The first stage would be to identify potential CO_2 stores, their capacities and distances from the capture plant. The next stage would be to identify how the CO_2 could be transported to the storage sites. Economically feasible techniques for large scale transportation of CO_2 could include pipelines and ships. For pipelines, technically feasible and safe routes should be identified and barriers to obtaining rights of way and public acceptance should be considered. Pipelines have large economies of scale, so the proximity to other potential sources of captured CO_2 should be reviewed. For ships, the feasibility, safety and acceptability of on-shore CO_2 buffer storage and ship loading and unloading facilities should be assessed.

The requirements for qualifying a storage reservoir for a capture ready plant will have to be defined by policy makers. On the one hand it may be sufficient to identify a broad area which has large potential storage capacity. On the other hand it may be deemed necessary for the power plant developer to procure detailed geological and other surveys of a specific storage reservoir and to purchase a contractual option on the reservoir to ensure that it is not used for an alternative CO_2 capture and storage project.

Power plant capture ready pre-investments
As well as satisfying the essential requirements of space, access and a route to storage, further pre-investments can be made to reduce the cost and downtime for retrofit of CO_2 capture. Some potential capture ready pre-investments apply to all technologies, including oversizing pipe-racks and making provision for expansion of the plant control system and on-site electrical distribution. These pre-investments could be relatively attractive, as they are generally low cost but could result in significant reductions in the costs and downtime for retrofit. Other potential pre-investments apply to specific capture technologies, as described below.

Pulverised coal plants with post-combustion capture
The main areas of the plant which will be affected by CO_2 capture retrofit are flue gas treatment and the steam turbine and its ancillaries. The feed gas to post combustion CO_2 scrubbers needs to have low SO_X and NO_2 concentrations to minimise degradation of current (and probably future) solvents. If the power plant is to be built without FGD, provision should be made to add a suitable FGD when CO_2 capture is retrofitted. If the plant is to be built with FGD, either the FGD should be designed to meet the flue gas purity requirements of CO_2 capture or provision should be made to upgrade the FGD performance in future.

Using current post-combustion amine scrubbing technology, about 40-50% of the low pressure steam has to be extracted from the steam turbine, for use in the amine regenerator reboiler. There are various ways in which the steam turbine could be designed to minimise the penalties associated with retrofitting this steam extraction and allow for future changes in extraction levels. Details are included in the study report. After capture retrofit, more low grade heat would be available for boiler feed water preheating. This has some impacts on the steam turbine and condensate pre-heating equipment, which should be taken into account in a capture ready design.

Pre-investment in a high efficiency ultra-supercritical steam cycle would minimise the quantity of CO_2 which would have to be to be captured, transported and stored per kWh of electricity. This investment would have the added benefit of reducing CO_2 emissions even before capture retrofit.

Pulverised coal oxy-combustion plants
In-leakage of air into the boiler and its ancillaries should be minimised, to avoid contamination of the CO_2 product. Air ducts and fans should be designed to enable them to be re-used for flue gas recycle after the plant has been converted to oxy-combustion. FGD may or may not be needed after conversion to oxy-combustion, depending on the plant design and the sulphur content of the fuel. If it is intended to use FGD after conversion to oxy-combustion, the FGD plant should be designed so that it could be adapted to the different gas flows and compositions. Modification of the steam cycle to utilise additional low grade heat and pre-investment in an ultra-supercritical steam cycle, as mentioned above for post-combustion capture, also apply to oxy-combustion.

Integrated gasification combined cycle plants with pre-combustion capture
Retrofit of CO_2 capture to an IGCC plant would involve addition of shift converters, modification of the acid gas removal plant to enable it to also separate CO_2, conversion of the gas turbines to hydrogen combustion and some changes to the steam system. The shift conversion reaction is exothermic, which reduces the overall heat of combustion of the fuel gas. To avoid having to operate the gas turbine at reduced load after capture retrofit, which would be an efficiency and cost penalty, provision could be made for increasing the capacity of the gasification plant, oxygen production plant and other ancillary plant. Various pre-investment options are discussed in the report. The intention to retrofit CO_2 capture could also have implications for the choice of gasifier and gas turbine.

Natural gas combined cycle plants
Natural gas combined cycle plants could be retrofitted with post or pre-combustion capture. For post-combustion capture, steam would need to be extracted from the steam turbine, as described above for a coal fired plant. For pre-combustion capture, natural gas partial oxidation, shift conversion and CO_2 separation plants would need to be retrofitted, the gas turbine would have to be converted to hydrogen

combustion and the HRSG and steam turbine would have to cope with the resulting changes in flue gas flowrate, composition and temperature. All of these issues should be taken into account in a capture ready plant design.

Economics of capture ready pre-investment

As mentioned earlier, some capture ready pre-investments are expected to have low costs and high potential benefits. However, there are two major reasons for not making major capture ready pre-investments: economic discounting and uncertainty.

Discounting

Economic discounting is a well established economic principle which means that economic resources in the future are worth less than at present. For example, at a 10% annual discount rate an investment of $1 would need to result in a saving of more than $4 fifteen years in the future.

Uncertainty

Because of uncertainty regarding future regulations and values of carbon credits, it is uncertain if or when capture would be required. It is also uncertain how capture technologies will develop in future. The costs of capture technologies are expected to decrease in future due to 'learning by doing' and incremental technological improvements. There is also the possibility that substantially different and better technologies may become available. Examples of technologies which may be successfully developed are post combustion ammonia scrubbing and membrane technologies for oxygen production. If a plant is made capture ready for just one existing technology, it may become locked-in to a technology which becomes obsolete and the pre-investment may become worthless. Capture ready plants should thus be designed to accommodate anticipated future technological improvements, as far as reasonably possible. Nevertheless, it is difficult to predict future technology developments and the risk of obsolescence is a major reason for not making substantial technology-specific pre-investments.

Case studies

The study report includes analysis of the economics of pre-investments in IGCC, post combustion and oxyfuel capture and the sensitivity to various economic parameters. The economics of capture ready pre investments will depend on local circumstances. A simple spreadsheet is therefore provided to enable individuals to assess sensitivities to various technical and economic parameters based on their own site-specific circumstances.

In this overview an alternative type of major pre-investment is presented, namely the choice of IGCC power generation technology instead of pulverised coal combustion. The relative costs of IGCC and pulverised coal power plants are highly uncertain at present. Several Front End Engineering (FEED) studies are being carried out by power plant developers which should help to clarify the situation, although the results may not be made available in the public domain. Published literature tends to indicate that bituminous coal fired IGCC plants will be more expensive than supercritical PC plants when both are built without CO_2 capture but that IGCC plants with capture are less expensive than PC plants with current amine scrubbing or oxy-combustion CO_2 capture. If capture is to be retrofitted some time during the life of the plant, it may be worthwhile building an IGCC plant even if it is more expensive than a PC plant before capture retrofit. The timescale for retrofit will be crucially important. If capture is retrofitted 10 years after plant start-up, IGCC would be preferred over PC if it had a cost of electricity before capture that is up to about 7% higher[1]. If capture is retrofitted 15 years after the plant is started up, IGCC would be preferred if its cost of electricity before capture was up to 4% higher than that of a PC plant but if is retrofitted after 5 years it would be preferred even if its cost of electricity was up to 11% more than that of a PC plant before capture. It is clear that unless capture is retrofitted relatively soon after plant start-up, it is not worthwhile building a plant which has a substantially higher cost of

[1] This example is based on a 10% annual discount rate and a 40 year overall plant life. It is assumed that retrofit of post-combustion capture increases the cost of electricity by 50% and retrofit of capture to an IGCC increases the cost of electricity by 25%. It is also assumed that the downtime for retrofit would be same for capture retrofit at PC and IGCC plants, although that is not necessarily so.

electricity before capture. This analysis ignores the issues of technological and regulatory uncertainties discussed earlier, which would make pre-investment even less attractive.

Coal-to liquid plants

Fossil fuel-consuming plants other than power plants could also be built capture ready. Coal-to-liquid (CTL) plants are of particular interest to some policy makers. There are two types of coal to liquid plant: direct and indirect liquefaction. Both are well suited to CO_2 capture and storage, because they already involve at least some separation of concentrated CO_2. In most cases the extra processing consists mainly of compressing the CO_2 to enable it to be transported and stored.

In direct liquefaction, coal is slurried in recycle coal-derived heavy oil and is reacted with hydrogen at high pressures. The output is separated into oil products, recycle oil, gaseous products and heavy residues, which are normally gasified, sometimes along with more coal, to produce the hydrogen needed by the process. Most of the CO_2 that is produced by the process is separated at high purity during the production of hydrogen. Smaller quantities can be separated from the hydrocarbon off-gases from the liquefaction process.

In indirect liquefaction, coal is gasified, cleaned and shifted, if necessary. CO_2 and sulphur compounds are then separated and the resulting synthesis gas is fed to a Fischer-Tropsch synthesis unit where liquid fuels are produced. Most of the unconverted tail gas from the synthesis unit can be stripped of CO_2 and recycled to the synthesis unit, possibly via a methane reformer. In an alternative 'once-through' configuration all of the unconverted gas from the synthesis unit is fed to a gas turbine combined cycle power plant. In a plant with tail gas recycle most of the carbon that is not contained in the final products is separated as CO_2. This CO_2 is normally vented to the atmosphere but it could easily be compressed for storage. In a once-through CTL plant some CO_2 is separated from the synthesis gas up-stream of the synthesis unit. For a higher percentage capture, a CO_2 separation unit would have to be added to remove CO_2 from the tail gas from the synthesis unit, prior to combustion in the gas turbine.

It would be relatively simple to make CTL plants capture ready. Space would need to be made available for the compressors and ancillary equipment, including the associated cooling water systems, electricity supply and control systems, and it would be necessary to ensure that there was a route to CO_2 storage.

It should be noted that CTL plants without CO_2 capture and storage would substantially increase CO_2 emissions to the atmosphere compared to the baseline of conventional extraction of petroleum. This, and the relatively low costs of CO_2 capture in such plants, may mean that they are more likely to be built with CO_2 capture installed, rather than as capture ready plants, to bring the carbon-footprint of the products down to close to that of petroleum-derived liquid fuels.

Expert Reviewers' Comments

The draft study report was reviewed by various external experts. IEA GHG is very grateful to those who contributed to this review. The reviewers provided various helpful suggestions which contributed to the quality of the final report.

The headline summary of capture ready considerations was circulated to IEA GHG's Executive Committee members and the minor comments received were taken into account. However, this does not imply that the headline summary is necessarily endorsed by the Executive Committee members.

Major Conclusions

A study of options for CO_2 capture retrofit and potential pre-investments should be carried out as part of the process of qualifying a new power plant as "capture ready".

The key issues for capture ready plants are inclusion of sufficient space and access for the additional facilities that would be required and identification of reasonable route(s) to storage of CO_2. Pre-investment in these essential capture ready features is in general expected to be relatively inexpensive.

Optional further pre-investments could be made to reduce the cost and downtime for CO_2 capture retrofit. Some relatively minor pre-investments could significantly improve the ease of capture retrofit.

Opportunities for substantial economically attractive pre-investments are expected to be limited, unless capture is going to be retrofitted relatively soon after start-up of the power plant. This is mainly because of the effects of economic discounting and uncertainties regarding future technological developments, regulatory requirements and prices of carbon credits.

Recommendations

Permitting authorities should specify what information needs to be provided to enable them to judge whether a plant qualifies as capture ready.

A particular uncertainty is the level of information that should be provided regarding CO_2 storage. To help permitting authorities to prepare guidelines for capture ready plants, the techniques and costs of characterising potential CO_2 storage reservoirs should be summarised and the legal issues associated with access to and mineral rights for those stores should be reviewed.

CO_2 CAPTURE READY PLANTS

Prepared for IEA Greenhouse Gas R&D Programme

R. Irons[1], G. Sekkapan[2], R. Panesar[2], J. Gibbins[3], M. Lucquiaud[3]

[1] E.ON UK PLC
[2] Doosan Babcock
[3] Imperial College London

EXECUTIVE SUMMARY

INTRODUCTION

In order to maintain power supplies, industry worldwide needs to replace large quantities of utility plant that has reached the end of its useful life. It is also expected that a significant volume of extra capacity will be required in some rapidly growing economies. Coal represents an attractive option as a prime mover for new-build plant due to the high price of oil and gas, coal's relatively stable price and the fact that coal is available as an indigenous fuel in markets such as China, India and the USA, where much of the plant is likely to be built.

However, international political pressure is also growing to reduce anthropogenic carbon dioxide emissions since they are linked to concerns about global warming There is a fear that, if a new generation of fossil fuel power plants are built worldwide with no option for CO_2 abatement, then a large amount of CO_2 emission to atmosphere will be 'locked-in' since such plants may well have an operational life of forty years. However, it is not currently economically feasible to deploy a generation of power plants fitted with capture technologies.

The concept of a 'capture ready' power plant therefore comes into being. This is a plant which is initially not fitted with CO_2 abatement but which, subsequently, can be fitted with a technology to capture the gas when regulatory or economic drivers are in place to drive this.

The underlying purpose of making a plant ‘capture-ready’ is to facilitate retrofitting carbon dioxide capture to that plant in the future to avoid future ‘carbon lock-in’, both at a plant and a national (and global) level.

The purpose of this study is to review the technical options that may be available to retrofit a capture technology to the various configurations of power plants that may be built in coming years and to identify (a) necessary and (b) potentially economically attractive options for pre-investment in those plants to make retrofit economically feasible.

DEFINITION OF ‘CAPTURE READY’

It should be noted immediately that there is no agreed definition of ‘capture-ready’ power plant.

For the purposes of this study, it has therefore been necessary to define some terms of reference. The authors have therefore adopted the approach outlined below which, although it still does not offer a formal definition, attempts to identify those issues which are pertinent to capture ready plants.

A CO_2 capture-ready power plant is a plant which can include CO_2 capture when the necessary regulatory or economic drivers are in place. The aim of building plants that are capture-ready is to avoid the risk of “stranded” assets or ‘carbon lock-in’.

Developers of capture-ready plants should take responsibility for ensuring that all known factors in their control that would prevent installation and operation of CO_2 capture have been eliminated.

This might include:

- A study of options for CO_2 capture retrofit and potential pre-investments
- Inclusion of sufficient space and access for the additional plant that would be required
- Identification of a reasonable route to storage of CO_2

Competent authorities involved in permitting power plants should be provided with sufficient information to be able to judge whether the developer has met these criteria.

SCOPE AND KEY FINDINGS

For supercritical Pulverised fuel (PF) plant, the most developed capture retrofit options are post-combustion amine capture and oxy-fuel combustion. The large amount of background knowledge on PF technology has allowed the implications of these retrofit technologies to be examined in some detail in this document and equipment descriptions, cost and performance estimates have been developed for both capture technologies.

Because a recent review by IEA GHG has assessed the capture options for gas-fired plant in detail and found them to be generally high cost in comparison to capture from coal, this report has not considered those options in detail.

The basic principle of capture retrofit to IGCC is through the application of a shift reactor, CO_2 separation plant and the provision of a modified gas turbine and the implications of these for plant operation have been discussed in generic terms.

The configuration of the optimum capture plant will also, for IGCC, depend on the choice of the gasifier, the GT and the acid gas removal system. Therefore whilst it has been possible to refer to a small number of studies in the literature that have considered capture-ready options for individual IGCC configurations, it should be stressed that other options will exist for different plant configurations.

For the coal-based technologies (IGCC or PF with post-combustion capture or oxy-fuel), optional capture-ready pre-investments been identified.

Some technological options, such as readily expandable systems (e.g. control, fire, compressed air), and readily upratable equipment (ID fans, cooling water pumps) are very low cost and should be implemented in plants contemplating the future fitting of capture. Similarly the provision of 'pipe-runs' (where future piping could be installed to access existing equipment) should be considered and implemented. For post-combustion amine capture, a flue gas desulphurisation system capable of being upgraded to meet the ultra-low levels required during CO_2 capture should be considered.

Estimation has been made of the impacts on performance and capital and operating costs of pre-investments, and the savings in subsequent retrofit costs. Assessment of the likely impact on performance and costs are also included.

A spreadsheet tool has been developed to allow an assessment of the trade-off between pre-investment and subsequent savings for a range of different factors, including the time from plant construction to retrofit, the discount rate, fuel costs, plant efficiency and time to retrofit. The spreadsheet is to be made available to the IEA Greenhouse Gas Programme's members to help assist them with their own assessment of any worthwhile capture-ready investments for their own circumstances.

The application of the model has shown that the economics of retrofit can be critically dependent on the time before retrofit, the discount rate used, the time to make the retrofit and the relative performance before and after retrofit. Dependent on the parameters selected, pre-investment is sometimes justified and, at other times, not. The tool can be used by stakeholders to assess the attractiveness of pre-investment based on their own economic parameters and their own perception of their market and local costs.

It is therefore recommended that, as financial data becomes more readily available, and the performance of the various candidate technologies more clear (particularly as projects develop to the FEED stage and the data comes into the public domain) that the analytical approach outlined in this document may be used with advantage to re-examine those economics in coming years.

GLOSSARY OF TERMS

AGR	Acid Gas Removal
ASCPF	Advanced Supercritical Pulverised Fuel
BOP	Balance of Plant
COE	Cost of Electricity
CCS	Carbon Capture and Storage, or CO_2 Capture and Storage
CSLF	Carbon Sequestration Leadership Forum
DOE	Department of Energy - US
DTI	Department of Trade and Industry - UK
EPRI	Electric Power Research Institute
ESP	Electrostatic Precipitator
FEED	Front End Engineering and Design
FGD	Flue Gas Desulphurisation
GEM	Gasification Enabling Module
GHG	Greenhouse Gas
GT	Gas Turbine
GTCC	Gas Turbine Combined Cycle
HAZOP	Hazard and Operability
HP	High Pressure
HRSG	Heat Recovery Steam Generator
IGCC	Integrated Gasification Combined Cycle
IP	Intermediate Pressure
LP	Low Pressure
NPV	Net Present Value
OEM	Original Equipment Manufacturer
PF	Pulverised Fuel (also equivalent to ‘PC’ - Pulverised Coal)
RFCS	Research Fund for Coal and Steel
SC	Supercritical
SCR	Selective Catalytic Reduction
SNCR	Selective Non-Catalytic Reduction
ST	Steam Turbine
UAT	Unit Auxiliary Transformer
USC	Ultrasupercritical
WSC	Water - Steam - Condensate

CONTENTS

1 INTRODUCTION

Over a third of global CO_2 emissions from fossil fuel use are from power generation. Many new power plants will be built in the near future to satisfy increases in energy demand, particularly in developing countries such as China and India, and to replace old plants in developed countries. To avoid CO_2 emissions to the atmosphere, CO_2 could be captured at these new power plants for permanent storage underground but at present there are insufficient economic and regulatory measures to persuade power utilities to capture CO_2.

However, it is generally recognised that mankind will need to make major reductions in CO_2 emission within the lifetimes of these new power plants, which can be 40 years or more. Consequently, utilities may want to design their plants so that CO_2 capture could be easily retrofitted in future, if required. This is known as making plants 'capture-ready'. The benefits of making plants capture ready are:

- The risk that it will be impossible to retrofit CO_2 capture in future is avoided
- The reduced cost of retrofitting CO_2 capture in future may more than compensate for increased costs when the plant is built, even after allowing from the effects of economic discounting.

2 APPROACH

2.1 Study Objectives

This study assesses the main options for making power plants capture-ready and their advantages and disadvantages. The effect of being capture-ready on plant costs and performance and the sensitivity to local circumstances is explored.

Financial incentives or regulatory measures may be necessary to persuade owners to make their plants capture-ready. It is also possible that utilities or investors will decide to make plant capture-ready without incentive or regulation in response to the risk associated with potential changes to legislation in the future. These issues are important but they are outside the scope of this study. However, it is expected that the information provided by this study will be used by others to assess these issues.

The overall aim of the study is to understand and, where possible, quantify the impacts and costs associated with the retrofit of a capture technology to a power plant and how this may interact with pre-investment made in that power plant to facilitate the retrofit.

Fossil fuel power plants have, until now, largely been based on steam turbine cycles for coal-fired plant and combined cycle gas turbine for gas firing, both of which are mature technologies. The move towards CO_2 capture is driving the development of a large number of technologies new to the industry, such as pre-combustion capture in gasification based systems, oxyfuel combustion or post-combustion amine capture. All of these offer the possibility of high degrees of CO_2 capture.

Developers of these technologies are trying to bring them to market for full-scale demonstration and, in the long-term, to reduce their cost of installation and operation. Other technologies are also being developed, which are further from market but which might turn out to be economically attractive in the medium to long term. Economic decisions on future power plants are therefore being taken at a time when there is a huge amount of development work worldwide aiming to improve the understanding of, and ultimately reduce the cost of, CO_2 capture from power plants.

Increasing quantities of 'hard' cost data for all these technologies are likely to become available in the near future and will be invaluable in underpinning future decisions. This document therefore develops a methodology for the long-term assessment of cost-optimisation decisions in capture ready plants based on current projections of cost but which may also allow them to be refined as more data becomes available in the market.

3 SCOPE

This document covers the following scope

1. A review of existing published work on capture-ready plants.

Identification and description of measures which would be essential to ensure that CO_2 capture could be retrofitted to power plants in future if required. The study considers the leading power generation and CO_2 capture processes:

- Pulverised fuel (PF) combustion steam cycles

  - Post combustion amine scrubbing

  - Oxy-combustion

Due to the depth of established knowledge of PF cycles it has been possible to analyse these systems in some depth.

- Coal gasification combined cycles

  - Pre-combustion solvent scrubbing (shift followed by physical solvent)

Less data is available on the performance and optimisation of these cycles and the analysis described for them is therefore more generic than for the PF plants.

- Natural gas combined cycles

  - Post combustion amine scrubbing

  - Pre-combustion reforming and solvent scrubbing

This report does not consider these in detail but rather draws on the major findings of IEA report 2005/1 - Retrofit of CO_2 Capture to Natural Gas Combined Cycle Power Plants)

2. Assessment of impacts of the essential capture-ready measures on the capital and operating costs and other features, including space and raw material requirements, for each of the technology options
3. Identification of optional capture-ready pre-investments for the leading power generation and capture processes.
4. Estimation of the impacts on performance and capital and operating costs of each of the pre-investments, and the savings in subsequent retrofit costs. Assessment of the likely impact on performance and costs.
5. Identification of reasons why pre-investments may not be utilised, such as technological obsolescence.
6. An assessment of the trade-off between pre-investment and subsequent savings for a range of different factors, including the time from plant construction to retrofit, the discount rate, fuel costs performance before and after retrofit.
7. The development of a simple spreadsheet to help stakeholders to identify any worthwhile capture-ready investments for their own circumstances.

Factors which are likely to cause cost variations in different markets worldwide are also discussed.

3.1. Study Basis

3.1.1. Basis for Technical Assessment

The study considers, in turn, five of the leading candidate technologies for new generation plant to be built without initial CO_2 capture but with the option of adding that capture at a later date. Specifically, these are

- Supercritical PF - with subsequent fit of post-combustion amine capture
- Supercritical PF - with subsequent fit of oxy-fuel firing
- Natural Gas Combined Cycle - with subsequent fit of post-combustion amine capture
- Natural Gas Combined Cycle - with subsequent addition of natural gas reforming, shift and solvent CO_2 removal.

  [Note that the discussion of the gas-fired options in this document is limited as much of the analysis has already been carried out in IEA-GHG report 2005/1]
- Integrated Gasification Combined Cycle (IGCC) - with subsequent addition of shift and solvent CO_2 removal

The study assesses the differences in configuration between the plant in initial baseline operation and in its potential final configuration. It then explores, in each case, the opportunities for, and implications of, making design modifications to the initial configuration to ensure that the subsequent retrofit of capture is quicker, lower cost to construct, or cheaper in long-term operation.

The analysis is based largely on technologies which are at or near market at the time of writing (early 2007) since these are the only techniques which can be addressed with any degree of certainty. It is recognised that other technologies are under development which may in the medium term invalidate some of the technical performance assumptions made in this document. In fact this represents one of the major challenges to the development of capture ready plant, since this will always require some degree of prediction of the type, configuration and operational requirements of the optimum method of capture at the time when the technology needs to be retrofitted. If technology develops significantly in the period between the installation of capture ready features and the fitting of capture, then there is a significant risk that some of the pre-investment may no longer be relevant at the time of installation.

3.1.2. Basis for Economic Assessment

The basis of economic evaluation in this document is a discounted cash flow calculation typical of the assessment methodology used by project developers to judge the through-life cost of a project. The particular tool which underlies the analysis is a variant of the well-established IEA GHG spreadsheet. The model recognises that there are different economic implications in constructing new plants with the inclusion of provisions for later capture retrofit. Typically a plant with adaptations for capture readiness will have higher capital cost and/or lower initial efficiency than a plant with no preparation for capture. However it will typically take less time to retrofit, at lower cost and/or will ultimately have a reduced energy penalty for retrofitting capture when compared to a plant which was not designed to be capture-ready.

There are few real data for the cost of any of the technologies outlined in this document. No carbon capture plant has been applied to a power station at commercial scale or under commercial conditions and the coal-powered IGCC is not currently a widely deployed technology, so that the baseline costs for a pre retro-fit

IGCC are themselves somewhat uncertain. There are a large number of new-build IGCC projects under consideration at the time of writing, particularly in North America, and if these come to fruition there will be a firmer guide from the market as to the cost of IGCC plant, and, as problems arise or are eliminated what the cost of the 'Nth' plant will be i.e. the cost of the technology once it has matured commercially.

In parallel, the capture technologies are moving towards larger scale demonstration, and significant effort is being invested to decrease their costs and, specifically, energy consumption. As illustrations, in post-combustion capture, developers are seeking to decrease the specific energy consumption of amine capture through the development of new or blended solvents, whilst EPRI and Alstom[4] feel the use of chilled ammonia may dramatically reduce the energy penalty for capture; all the oxygen-based technologies have the potential to reduce costs significantly if the cost of air separation can be reduced - perhaps through the deployment of ion exchange membranes and virtually all the technologies can benefit from the development of new techniques to optimise the heat integration of systems with significantly more heat sources and sinks than in a traditional power plant.

Thus, while there is already some doubt as to the costs of baseline power plants and their preferred retrofit capture technologies, the costs of these technologies into the future are even less certain. Of course, as time moves on and the technologies develop, these cost estimates will, in turn, firm up so that projections of costs made in as little as two years' time may be significantly different from those made today.

Additionally it is virtually impossible to generalise on costs worldwide, even for commodities and items which are already produced and traded. There are local variations in the cost of fuel, the cost of capital, the price of power, the value and disposal costs of by-product and waste streams etc.

A further key variable in the cost of fitting capture on power plant is the time from commissioning until a CO_2 retrofit is made. This will be driven by a number of factors including the legal issues (legality of storage, recognition of storage, resolution of liability issues), public acceptability, and regulatory issues (cost of CO_2 emission or regulatory requirement to fit capture).

Accordingly, the approach taken here has been to develop a spreadsheet to allow interested parties to carry out their own assessments of investment options based on their own local factors and, perhaps, equally important, their own knowledge or perception of future technology performance, costs and regulatory requirements for CO_2 capture in their markets.

[4] http://www.epriweb.com/public/000000000001013718.pdf

4 CO_2 CAPTURE TECHNOLOGY OVERVIEW

4.1 General

All of the currently available technologies for separating a concentrated CO_2 stream from a large power generation plant require both significant additional equipment and a significantly increased input of energy, when compared to 'conventional' generation technologies without capture. The form of the additional equipment and the nature of the energy consumption vary, but the outcome is that all plants fitted with CO_2 capture technology produce power which has a higher basic cost (i.e. before any cost for emitting CO_2 is taken into account), and which is produced at lower efficiency, than conventional fossil-fired plants without CO_2 capture.

4.2 Pre Combustion Capture

In gas-fuelled systems the feedstock is reformed (with steam alone or a steam/O_2 mixture) to give a mixture rich in H_2 and CO_2. In systems with solid or liquid feedstocks, these are gasified (with air, O_2 and/or steam) to give a synthesis gas 'syngas' which is shifted to again give a gas rich in CO_2 and H_2.

For non-gaseous feedstocks, the gas stream must generally be cleaned to remove species such as sulphur, nitrogen (cyanides and ammonia) chlorides and others which either pose a threat to hardware or which are regulated by environmental requirements. Trace species are generally removed in physical solvent or mixed-solvent based systems.

Independent of the feedstock, it is then necessary to separate the CO_2 from the H_2, typically using a physical or mixed solvent system, although the separation could also potentially be achieved using membranes. The CO_2 is then dried, compressed and sent for storage, whilst the hydrogen-rich gas passes to a gas turbine (or, potentially, a fuel cell) to generate power.

4.3. Oxy Combustion Technology

The Oxyfuel combustion technology involves replacement of combustion air with a mixture of CO_2 rich flue gas recycle and near pure oxygen for combustion.

An Air Separation Unit (ASU) is required to supply a stream of near pure oxygen into the flue gas recycle for the combustion process. A major part of flue gas has to be recycled back to the boiler plant for providing a primary flue gas recycle (FGR) stream to transport pulverised fuel and a secondary Oxyfuel flue gas recycle to the burners and furnace.

The resulting flue gas from an Oxyfuel boiler is predominantly CO_2 and water with trace species such as NOx and SO_2. The CO_2 rich flue gas needs to be cleaned and dried prior to compression for storage or other uses.

The most widely considered technology for oxygen production is cryogenic air separation. The auxiliary power consumption of a cryogenic air separation unit is high and has a major impact on the overall efficiency of the power plant. Integration of the heat cycle of plants fitted with Oxyfuel capture is essential to minimise the impact of the capture process on the overall plant efficiency.

4.4 Post Combustion Capture

The most widely considered technology for post-combustion capture involves the use of chemical solvents - typically a form of amine - which reacts with the CO_2 in the flue gas from a normal combustion process and is subsequently regenerated at a higher temperature, producing a purified CO_2 stream suitable for compression and storage. Other capture technologies, based on flue-gas refrigeration or the use of other

capture solvents such as chilled aqueous ammonia are also under consideration but are not currently as close to deployment.

For amine-based systems, the flue gas needs to be pre-treated to reduce acid gas (NO_2 and SO_2) concentrations to extremely low levels to prevent these reacting irreversibly with the solvents, then cooled either in a heat exchanger or by direct contact with the amine in a scrubber column. The CO_2 -rich solvent is then passed to a stripping column where it is heated in a reboiler to drive off the CO_2 and the amine is recirculated. The scrubbing plant required to treat flue gas is physically large, with typically two scrubbers and one stripper associated with a 500MW power plant, and therefore a significant footprint.

The heat requirement of the current generation of solvents is high and has a major impact on the overall efficiency of the power plant since steam which would otherwise generate power in the LP turbine of the plant is now used to regenerate the solvent instead. Integration of the heat cycle of plants fitted with post-combustion capture is essential to minimise the impact of the capture process on the overall plant efficiency.

4.5. Cost & Performance Summary

All of the technologies described above include significant elements of plant equipment and significant consumption of energy.

None of the technologies is yet in operation at a full commercial scale and therefore there are a number of risks involved in the application of the technologies. These include:

1. There is no commercial reference to establish the base cost of each of the technologies and therefore cost estimates are, at best, very approximate.
2. The performance prediction of each of the technologies is based on much smaller-scale applications and performance at full-scale may expose operational issues which will need to be addressed as the technologies are scaled up.
3. All the technologies, if fitted with CO_2 capture, require a route to CO_2 storage sufficient for the lifetime emissions of the plant. The regulatory and technical requirements for geological storage have yet to be established.

Accordingly, whilst there is a general acceptance that power plant fitted with CO_2 capture will be more expensive and less efficient than plant without capture, there is a high degree of uncertainty as to the capital cost of capture, the revenue cost of plant operated with capture and the additional energy consumption required.

5 REVIEW OF PUBLISHED WORK/ CURRENT PROJECTS ON CO_2 CAPTURE READY POWER PLANTS

Before moving on to describe work which has been done on the various technical options for capture-ready plant, it is perhaps worthwhile briefly discussing the term 'capture-ready' itself.

It is immediately clear from a brief survey of the literature (e.g. Stephens 2005) [5]that there is no agreed definition of the term.

As an example, the US Energy Policy Act Title XVII – Incentives for Innovative Technologies refers to technologies "that have a design that is determined by the Secretary to be capable of accommodating the equipment likely to be necessary to capture the carbon dioxide that would otherwise be emitted in flue gas from the plant". This illustrates the fact that the ultimate definition of 'capture-ready' may lie in the political and regulatory domain.

Sekar et al (2005) [6] have argued that the choice of a base generation technology, between IGCC and pulverised coal combustion (PC), is itself a capture-ready decision, since they view IGCC as being a more cost-effective platform for long-term capture and this view is also implicit in US energy policy, as evidenced by its targeting of funding towards IGCC and the long-term development of the Futuregen project. However recent projections by EPRI (Wheeldon, 2006) [7] show the long-term costs of capture-fitted ASCPF and IGCC are potentially comparable. Although this could suggest that both technologies should be considered equally capture-ready, it is important to note that various other considerations should also be taken into account when comparing the capture-readiness of different technologies.

The EU has recommended that all new power plants should be capture-ready by the end of the decade and also foresees a number of near-zero power plants (i.e. plants with capture) in operation by 2020.

At the 2005 G8 Gleneagles summit it was agreed that the participants should adopt a plan of action on climate change that included working "to accelerate the development and commercialization of Carbon Capture and Storage technology by…(c) inviting the IEA to work with the CSLF to study definitions, costs, and scope for 'capture ready' plant and consider economic incentives…".

This report is aimed at taking that process forward.

The study of fitting capture to power plants remains an exceptionally active research topic and, as such, the concepts, the costs and the performance of capture and capture-ready plants are under constant development. The following sections give a brief overview of current and recent studies in this area which will provide numerous updates on performance and costs as they move to completion. Section 5.2 reviews some of the major concepts and conclusions to have emerged to date.

5.1. Capture Studies

The following, ongoing programmes are actively informing the debate on carbon capture worldwide. Some are seeking to improve comparative understanding of different technologies, whilst others are aimed at developing specific technologies, or indeed individual projects. Note that the list is intended to be illustrative only; it is very far from being exhaustive.

---

[5] JC Stephens *Coupling CO_2 Capture and Storage with Coal Gasification: Defining "Sequestration-Ready" IGCC Energy Technology Innovation Project*, Harvard University May 2005

[6] R C. Sekar, J E. Parsons, H J. Herzog and H D. Jacoby *Future Carbon Regulations and Current Investments in Alternative Coal-Fired Power Plant Designs* MIT Report No. 129, December 2005

[7] J. Wheeldon, G. Booras and N. Holt Trondheim GHGT8* Proceedings June 2006

Projects aimed at comparative study, and improvement, of the performance and economics of a range of technologies.

- The international Carbon Capture Project (CCP) *http://www.co2captureproject.org/index.htm*
- The near-Zero Emissions Coal (nZEC) collaboration between the UK and China *http://www.gnn.gov.uk/content/detail.asp?ReleaseID=182772&NewsAreaID=2&NavigatedFromSearch=True*
- The Zero Emission Power Plant Technology Platform in Europe *http://www.zero-emissionplatform.eu/website/*
- The IEA Greenhouse Gas Research Programme *http://www.ieagreen.org.uk/*
- The Canadian Clean Coal Coalition *http://www.canadiancleanpowercoalition.com*
- The US Clean Coal Power Initiative *http://www.fossil.energy.gov/programs/powersystems/cleancoal/*
- The German national programmes including Cooretec and Cooriva, reviewing the technical issues associated with ultra-supercritical power plant, IGCC, oxyfuel and amine capture.
- The COALFLEET Initiative led by EPRI, aiming to assess the technical, regulatory and financial barriers to the first deployment of next-generation coal-based technologies.

Pulverised Fuel Plants

Active areas on capture and capture ready plant include:

- The CASTOR Framework 6 project - reviewing options for post- combustion CO_2 capture and the associated energy demands and the implications for steam turbine train design for operation with or without CO_2 capture with amine solvent. See project website (*www.co2castor.com)*
- R&D and commercially driven studies on emergent capture technologies that have the potential to greatly decrease the energy requirement of CO_2 capture.

  Relevant development areas include, but are certainly not limited to:

  - Alstom/EPRI chilled Ammonia.
  - Refrigerant separation of flue gas - Alstom/ Ecole des Mines, Paris.
  - Mitsubishi - development and demonstration of KS-3 solvent.
  - Cost reduction innovations in the Fluor amine capture process.
  - Cansolv is developing a project to build, own and operate a 5,000 tons per day capture plant employing their proprietary solvent.
- Doosan Babcock is leading a UK industry collaborative project (Project 407), supported by the UK DTI, to evaluate how retrofits can be accomplished on the UK fleet of coal-fired power plants and how they may be configured for capture-or capture-ready operation.
- Doosan Babcock is also leading another major project, DTI Project 366 - "Future CO_2 Capture Technology Options for the Canadian Market" - in collaboration with the Canadian Clean Power Coalition (CCPC) and others.

- Oxymod and ASSOCOGS Projects on oxyfuel combustion, both funded by the European Research Fund for Coal and Steel.
- The Commercial Deployment of oxy-fuel technology at 300MWe scale, recently announced by Sask Power in Canada - ***www.saskpower.com/aboutus/news/2006.shtml***
- A Carnegie Mellon study on current price of CO_2 capture technologies and the scope for future price reductions as those technologies mature.

NGCC Plants

- UK DTI Project 406 dealing with retrofit of gasification (with or without capture) to an existing NGCC plant gasification
- Retrofit of CO_2 Capture to Natural GCC Power Plants, IEA GHG report 2005/1
- ENCAP, a second Framework 6 project including studies of oxyfuel combustion and other novel cycles. (see *www.encapco2.org*)

IGCC Plants

- Public domain data emerging from various design and FEED studies being carried out world-wide and including IGCC design studies being carried out by AEP, Cinergy and Southern Company in the USA, E.ON in the UK and a review by Saskpower of a range of future generation options either with capture or capture-ready.
- The Australian Zerogen project at Stanwell *http://www.zerogen.com.au/*
- The Chinese Greengen project to develop an IGCC ready for capture by 2010
- Public domain Information from gasification technologies (non-power related) being deployed in China for chemical production.
- The German national programmes including Cooretec and Cooriva, reviewing the technical issues associated with ultra-supercritical power plant, IGCC, oxyfuel and amine capture.
- UK DTI Project 406 addresses gasification issues and so is also relevant to IGCC plants

5.2. Overview of selected capture-ready literature

5.2.1 Capture-ready definitions

The term 'sequestration-ready' is sometimes used interchangeably with 'capture-ready', but the former has also been used (more logically) to describe a CO_2 stream which is separated, and possibly also compressed and ready to go to storage, (or a plant that is producing such a stream).

The underlying purpose of making a plant 'capture-ready' is to facilitate retrofitting carbon dioxide capture to that plant in the future to avoid future 'carbon lock-in', both at a plant and a national (and global) level.

'Capture-ready' has been defined from primarily (a) a technical or (b) an economic perspective:

(a) *As a minimum, this requires that a feasibility study of how capture will be added later be conducted and that space and essential access requirements be included in the original plant to allow capture-related equipment to be retrofitted*. (Gibbins, 2006[8])

(b1) *A plant can be considered 'capture-ready' if, at some point in the future it can be retrofitted for carbon capture and sequestration and still be economical to operate. (Bohm, 2006)*[9]

(b2) *Plant designed to have CO_2 capture added at some time in the future with minimal impact on lifetime economic performance, not plant designed to have CO_2 capture added later at minimum cost.* (IEA GHG, 2003[10])

As Bohm also states, *the concept of 'capture-ready' is not a specific plant design; rather it is a spectrum of investments and design decisions that a plant owner might undertake during the design and construction of the plant*. In general, however, beyond space and access, significant capital pre-investments at build time do not appear to be justified by the cost reductions that can be achieved when capture is added (Bohm, 2006 [9]; Sekar, 2005 [11]). This is partly due to the time value of money. For example, at 10% annual interest, $1 saved in 10 years' time is worth only $0.35 now. Other factors are the uncertainty as to when and if capture will be added to the plant (determined partly by future demand for carbon reductions and availability of alternative abatement options) and the nature of the capture technologies that would then be available to retrofit. A plant location with feasible, and preferably inexpensive, access to geological storage is also a prerequisite for a capture-ready plant.

Capture-ready discussions in the literature, especially in the USA, have often been confined to IGCC plant, with an implied, or actual, assumption that capture could not be retrofitted to other types of power plant, principally pulverized coal units, or that no special provisions were needed to make such combustion units capture-ready.

The US Environmental Protection Act of 2005 (EPACT, 2005 [12]) offered financial support for a number of IGCC power plants provided they met a number of conditions, including being capture-ready:

"Qualifying IGCC projects must use coal, petroleum coke, or biomass for at least 65% of annual heat input, produce electricity for 65% of their useful output, have a design determined by the Secretary to be capable of accommodating equipment for capturing carbon dioxide, have an assured revenue stream to cover capital and operating costs approved by the Secretary and relevant PUC, and commence construction within 3 years of receiving a guarantee commitment."

In 2006, the US Internal Revenue Service (IRS) established a $1.3billion Section 48A Tax Credit Program for IGCC and other Advanced Coal Projects

---

[8] Gibbins, J., Haszeldine, S., Holloway, S., Pearce, J., Oakey, J., Shackley, S. and Turley, C., 2006, *Scope for Future CO_2 Emission Reductions from Electricity Generation through the Deployment of Carbon Capture and Storage Technologies*, Ch. 40 in *Avoiding Dangerous Climate Change*, Ed. Schellnhuber, H.J., Cambridge University Press, ISBN: 13 978-0-521-86471-8 hardback, ISBN: 10 0-521-86471-2 paperback, pg. 379 (http://www.defra.gov.uk/environment/climatechange/internat/pdf/avoid-dangercc.pdf)

[9] *Capture-Ready Power Plants - Options, Technologies and Economics M.C. Bohm* MSc Thesis Massachusetts Institute of Technology

[10] IEA GHG, 2003, *Potential for improvement in gasification combined cycle power generation with CO_2 capture*, Report PH4/19.

[11] Sekar, R.S., 2005, Carbon *Dioxide Capture from Coal-Fired Power Plants: A Real Options Analysis*, MSc Thesis, MIT. http://sequestration.mit.edu/pdf/LFEE_2005-002_RP.pdf

[12] EPACT, 2005, Energy Policy Act of 2005, (http://www.gasification.org/Docs/EPACT2005%20gasification%20sections.pdf)

McGurl *et al* [13]discussed the characteristics of 'sequestration ready' plants in the context of modelling studies carried out by US DOE contractors, as part of their 'Quality Guidelines for Energy System Studies'. The term was used in the exact sense of 'capture-ready', since it was explicitly stated that in a 'sequestration ready' plant the fitting of capture equipment was deferred. Although examples were given only for IGCC plants, it appears that their anticipated pre-investment levels would be low and that the same criteria could be applied to any type of plant:

One notion suggested for dealing with this problem [of CCS not currently being commercially viable, but possibly being required in the future] *is to describe plants that are "sequestration ready." This means that a version of the process has been conceived that would capture carbon, but that version is not the one being modelled. For instance, oxygen-blown integrated gasification combined-cycle (IGCC) systems can be fitted with shift reactors, solvent absorbers, and recovery units; water condensers and separators; gas compressors; and other equipment needed to recover CO_2. In anticipation that at some future time capture of CO_2 may have economic value (apart from its sale, which may not be possible at all plant locations), it has been suggested that project developers may wish to construct plants in a "sequestration ready" mode. Space at the plant site would be left unoccupied in anticipation that at a later date the equipment necessary for capturing carbon would be installed as a retrofit. Thus, it is asserted, capital and operating costs for carbon capture would be deferred until it was economic to do so.*

Time will tell whether this idea will be adopted by project developers. However, if process modellers choose to describe their process as being "sequestration ready," they will be expected to explain the basis of their claim in some detail. A plant that is "sequestration ready" as defined here would be more expensive to build than one that was not. More land would be required, and runs of piping would pass through unoccupied areas of the plant. You will be expected to describe both how costs of the "sequestration ready" plant were adjusted relative to a similar plant not designed for carbon capture, and how at a later time the necessary equipment to effect capture could be brought in and installed. You should also include discussion of how heat balances would change after refitting for carbon capture, and how these changes could be made without disruption to the plant. You should provide plot plans, process flow diagrams, and stream tables (see Section 5.3) for both the "sequestration ready" and "carbon capture" system configurations.

Stephens [14] examined the specific case of IGCC plant which would need to be 'sequestration ready" to get public funds, as envisaged in the US EPACT, 2005.

This discussion assumes that the costs associated with initiating CO_2 capture and storage can not currently be justified privately and are not going to be supported with public funds, yet that if public funds are going to support an initial fleet of IGCC plants the technology's primary advantage, the capability to capture CO_2 for storage, must be incorporated to some degree.

It was stated that the minimal requirement would include a conceptual plan for retrofitting capture without any actual changes in how the plant would be built, as an almost zero cost action. A range of additional actions were then listed that would incur progressively higher costs, and hence require a higher level of incentives:

---

[13] McGurl, G.V., James, R.E., Parsons, E.L., Ruether, J.A. and Wimer, J.G., 2004, *Quality Guidelines for Energy System Studies*, NETL.
http://www.netl.doe.gov/publications/others/pdf/QGESS%20-%209-30-03_3_1.pdf

[14] Stephens, J., 2005, "*Coupling CO2 Capture and Storage with Coal Gasification: Defining "Sequestration-Ready" IGCC",* BCSIA Discussion Paper 2005-09, Energy Technology Innovation Project, Kennedy School of Government, Harvard University.
http://bcsia.ksg.harvard.edu/publication.cfm?program=ENRP&ctype=paper&item_id=512

a) Leaving additional space for capture equipment and also over-sizing some components so that electricity output could be maintained after capture (the option of leaving space but having reduced power output was apparently not considered).

b) Identify an appropriate storage site. This could involve re-siting the project, although it was also noted that there was no absolute economic barrier to transporting CO_2 over longer distances.

c) Build with shift and CO_2 capture equipment installed but not operated. This was considered possibly a way of obtaining better system integration/matching with capture, although the technical viability of this approach was considered to be uncertain.

d) Build with shift and CO_2 capture system installed and operated but CO_2 vented to atmosphere, and no compression equipment installed.

5.2.2 Capture-ready studies

IGCC studies

A study of an oversized IGCC system (as in option (a) above) was presented at the Gasification Technologies 2003, San Francisco by Rutkowski and co-workers [2003] [15]. They studied the options of retrofitting capture to un-modified and 'pre-investment' IGGC plants, based on the ChevronTexaco (now GE) quench gasifier. *Retrofit modifications made to the pre-investment IGCC plant* (were) *essentially the same as those made to the baseline plant, but* (were) *less invasive due to the pre-planning, spooling in critical process areas, and use of oversized process equipment as needed.*

Performance and cost predictions for both configurations before and after capture are presented in Table 5.1. Efficiencies with and without capture were predicted to be the same for all options. The capture-ready plant with oversized gasifier had specific investment ($/kW) costs approximately 5% higher than a standard plant without capture and approximately 5% lower than a standard plant with capture. Unfortunately no figures were reported for a lower-cost capture-ready unit with appropriate layout changes but without oversized equipment.

[15] Rutkowski, M., Schoff, R., Holt, N. and Booras, G., 2003, *Pre-Investment of IGCC for CO_2 Capture with the Potential for Hydrogen Co-Production*, Gasification Technologies 2003, San Francisco, CA, October 12-15, 2003. (http://www.gasification.org/Docs/2003_Papers/29RUTK_paper.pdf)

Table 5.1 Comparison between standard IGCC plant and capture-ready IGCC plant with oversized gasifier and other equipment

	Standard IGCC Plant Dual Train (no capture)	Standard IGCC Plant Retrofitted for CO_2 Capture Derated 90%	Pre-investment IGCC Plant Oversized Dual Train	Pre-investment IGCC Plant Retrofitted for CO_2 Capture
Performance				
Net power, kW	509,280	424,830	509,280	448,850
Efficiency, %HHV	35.4	29.5	35.4	29.5
Heat rate, Btu/kWh HHV	9,653	11,569	9,653	11,550
CO_2 captured, lb/hr	N/A	839,372	N/A	885,381
Cost				
Total plant cost, $k	589,896	678,196	619,600	682,953
Total plant cost, $/kW	1,158	1,596	1,217	1,522
Fixed operating, $k/y	10,806	11,560	11,055	11,586
Variable operating, $k/y	13,837	14,878	14,547	15,173
Fuel @$1.35/MMBtu)	51,157	51,144	51,157	53,947
COE, $/MWh[a)]	45.74	59.32	47.09	57.23

(a) COE is based on total plant cost plus owners costs annualized at a rate of 15% and a 90% capacity factor

Griffiths and Scott [2003][16] proposed a 'new concept' capture-ready IGCC which incorporates a shift reactor (but which differs from both Stephens' case (c) and (d)). The shift is operated both without and with capture; without capture the shifted gases are passed to the gas turbine, with the capture the carbon dioxide is scrubbed out of the shifted gas mixture and replaced with nitrogen from the air separation unit. In both cases, heat is recycled (as hot water) from the shift reactor to the fuel gas at the gasifier exit (and before the shift). The estimated plant performance and costs, compared to purpose built plants with and without capture, are shown in Table 5.2. The principal differences for the novel system compared to purpose-built conventional systems are a slightly lower efficiency before capture, corresponding to an extra 5% fuel use, and approximately 2% higher specific capital costs with capture. Unfortunately the characteristics before and after capture retrofit, on the same bases, for a conventional IGCC system with a capture-ready layout, or for a conventional IGCC with oversized gasifier etc., were not reported. Although both studies are based on the GE quench gasifier, direct comparison with the results of Rutkowski et al [2003] is not possible, since the costs have been obtained on different bases so cannot be compared.

[16] Griffiths, J. and Scott, S., 2003, *Evaluation of Options for Adding CO_2 Capture to ChevronTexaco IGCC*, Gasification Technologies 2003, San Francisco, CA, October 12-15, 2003. (http://www.gasification.org/Docs/2003_Papers/28GRIF.pdf)

Table 5.2 Comparison between conventional IGCC and Jacobs 'new concept' IGCC with shift

Case 1A – Conventional IGCC built with no Shift and no CO_2 capture
Case 1B – Conventional IGCC built with a Shift and CO_2 capture
Case 2A – New concept IGCC with a Shift but no CO_2 capture
Case 2B – As per Case 2A retrofitted with CO_2 capture.

Case	1A	1B	2A	2B
Coal feed rate AR (t/h)	160	172	173	168
Steam turbine (MW)	246.9	241.3	254.6	233.4
Gas turbine (single) (MW)	197	194.4	197	197
Power output (MW, net)	559	489	576	472
Efficiency (%, LHV)	42.2	34.3	40.3	34
Efficiency (%, HHV)	40.7	33.1	38.9	32.8
Heat rate (Btu/kWh, HHV)	8384	10296	8777	10395
Capex $M	650.8	739.5	672.9	728.1
Capex $/kW	1164	1511	1169	1542

Natural gas combined cycle plant studies

Generic outline engineering studies for retrofitting capture to natural gas GTCC plants, including GTCC plants retrofitted with coal gasification units with shift and CO_2 capture, have been undertaken by Jacobs Engineering (IEA GHG, 2005 [17]). A comprehensive discussion of the possible barriers to retrofitting capture and possible ways to overcome them, to make plants capture-ready, was included under the following general classifications:

Avoiding potential barriers:

Plot Space

In addition to the required space for the installations themselves and coal storage if appropriate, attention should be paid to the space required for the construction activities. When space is available to store materials, tools and installation parts on site, the construction work can be done cheaper in comparison to an off-site construction area.

Available space in installation

Future tie-ins have to be defined and the space they require becomes an additional design requirement, e.g.:

- *large diameter (12"-36" dependent on the option concerned) fuel feed pipes to the gas turbine,*
- *large diameter low pressure steam line (approx. 36") in the post combustion option,*
- *stretching the HRSG (casing) to allow for some spare room for additional heating surfaces,*
- *space for a fan to overcome the pressure drop in a post-combustion capture absorber unit.*

Construction and start-up times can be minimised when additional facilities for making the tie-ins with the (plant) *in operation (Hot-tapping) are allowed for during construction.*

[17] IEA GHG, 2005, *Retrofit of CO_2 capture to natural gas combined cycle power plants*, Report 2005-1.

Accessibility to site
Extra attention should be paid to the accessibility for the big components of the pre and post combustion capture installations.

Possible allowance for changed process conditions in the plant design, e.g.:
- *larger HRSG superheater to maintain steam temperature with low-LHV fuel gas,*
- *extra cooling water capacity for any civil installations (e.g. water intake and outlet stations),*
- *operational flexibility and efficiency through improved process integration between a pre-combustion capture plant and the gas turbine, through provision for a gas turbine compressor bleed,*
- *a larger steam turbine and condenser to allow integration with the water-steam cycle of a pre-combustion capture plant.*

Pulverised coal plant studies

A discussion of capture-ready pulverized coal plants was presented by Gibbins and co-workers at an IEA GHG workshop in 2004 [IEA GHG, 2004[18]]. The requirements for making a pulverized coal plant capture ready were summarized as:

- *Put the plant close enough to a CO_2 sink*
- *Leave enough space for capture equipment*
- *Fit a suitable* (high efficiency) *FGD*
- *Steam cycle 'capture friendly', with an IP/LP crossover pressure of 3-4 bar to suit amine-type solvents*

Steam for solvent regeneration was to be taken from the large crossover pipe between the intermediate pressure and low pressure steam turbine cylinders. To cope with the reduced steam flow through the LP section it was envisaged either that one of the existing two or three LP cylinders could be removed or alternatively that a throttling valve would be fitted upstream of the LP section. The abstracted steam would be desuperheated using condensed water from the solvent reboiler after passing through a pressure-regulating valve. It was observed that single reheat plants would give much lower levels of superheat than double reheat plants, a possible capture-ready consideration. For single reheat plants, it was estimated that 2-3% of the plant output would be lost by throttling for a current amine capture unit retrofitted to a capture-ready plant with an IP/LP crossover pressure of 3-4 bar.

A feasibility study for a 350-450 MW capture-ready pulverized coal plant was reported by Ball *et al* [2005] [19]. It was noted that '*No firm requirement to capture CO_2 emissions from the plant can be anticipated but, since Canada is already a signatory to the Kyoto Treaty, future CO_2 capture options are needed to avoid the risk of it becoming a stranded asset – it needs to be 'capture ready'. Preliminary analysis has identified both the loss in plant output and the capital cost of the capture equipment as major factors in overall capture and storage costs. The object of the current feasibility study is to examine how both of these can be reduced, by appropriate design and layout of the 'capture ready' plant. It is anticipated that post-combustion*

[18] IEA GHG, 2004, *International test network for CO2 capture: Report on 7th workshop (10th September 2004, Vancouver, BC, Canada)*, Report Number PH4/34

[19] Ball, M., Stobbs, R., Ward, L., Gibbins, J. and Wilson, M., 2005, *A new 'capture ready' power plant project in Saskatchewan*, Proc. 4th Ann. Conf. on Carbon Sequestration, Alexandria VA, May 2-5 2005.

capture will be the principal focus, but accommodating this in 'capture ready' designs is complicated by the lack of demonstration plants for current technologies and the prospect of technology improvements before capture is actually fitted. The scope of the work being undertaken is at a pre feasibility level of costing, that is cost estimates of plus or minus 30%'. It was subsequently reported [Ball, 2006] [20] that requirements had changed and the objective was now to construct a plant built with CO_2 capture, with a commissioning date of 2011.

Previous work on capture-ready plants was summarized by Gibbins et al [2006] at GHT8[21]. A possible method to cover the costs of making a plant capture-ready was proposed. *To raise money it is envisaged that a power plant owner would issue a Capture Option to an institutional investor as part of an environment portfolio, through an investment bank with expertise in the area. The power plant owner would adjust the level of any pre-investment to maximise the sale value of the option, which would also depend on the type of technology used in the plant and on its location with respect to the availability of geological storage. By analogy to existing options in the market, a Capture Option would have an Expiry Date and an Exercise Price. However, the Exercise Price would have to be variable, since it is the cost of retrofitting and operating capture. At present typical Expiry Dates might be 15 to 20 years ahead.* It was suggested that Capture Options would also involve a range of market-based stakeholders in capture-ready and related capture technology and policy development.

It was also noted that *a high degree of uncertainty is inevitable when making a plant capture ready. It is not clear when the underlying global politics of climate change mitigation may justify extensive use of CO_2 capture and storage and hence retrofitting. Neither, given the current rapid developments in capture technology concepts, is it possible to specify in advance which capture technology will be available to retrofit to a particular plant. The precautionary principle suggests, however, that doing nothing until these uncertainties are resolved is not the best option. Indeed, it is quite likely that clarity will only emerge when political and market conditions dictate that new fossil plants are built with capture and so the need for capture ready plants no longer exists!*

[20] Ball, M., Gibbins, J., Stobbs, R., Cameron, D., Ward, L., Daverne, D., Page, T., Olson, W., May, L. and Kalmakoff, J., *SaskPower Clean Coal Project*, Proc. 5th Ann. Conf. on Carbon Sequestration, Alexandria VA, May 8-11 2006.

[21] Gibbins, J., Lucquiaud, M., Li, J., Lord, M., Liang, X., Reiner, D. and Sun, S., 2006, *Capture ready fossil fuel plants: definitions, technology options and economics*, Proc. GHGT-8 8th International Conference on Greenhouse Gas Control Technologies, 19 - 22 June 2006 Trondheim, Norway.

6. CAPTURE READY POWER PLANT REQUIREMENTS

6.1. Concept & Working Definition for Capture Ready Power Plants

It should be noted immediately that there is no agreed definition of 'capture-ready' power plant. For the purposes of this study, it has therefore been necessary to define some terms of reference. The authors have therefore adopted the approach outlined below which, although it still does not offer a formal definition, attempts to identify those issues which are pertinent to capture ready plants.

A CO_2 capture-ready power plant is a plant which can include CO_2 capture when the necessary regulatory or economic drivers are in place. The aim of building plants that are capture-ready is to avoid the risk of stranded assets or 'carbon lock-in'.

Developers of capture-ready plants should take responsibility for ensuring that all known factors in their control that would prevent installation and operation of CO_2 capture have been eliminated.

This might include:

- A study of options for CO_2 capture retrofit and potential pre-investments
- Inclusion of sufficient space and access for the additional facilities that would be required
- Identification of reasonable route(s) to storage of CO_2

Competent authorities involved in permitting power plants should be provided with sufficient information to be able to judge whether the developer has met these criteria.

6.2. Essential Capture Ready Requirements

As a minimum, a capture-ready plant should have eliminated all the factors that would <u>prevent</u> a retrofit taking place.

A key requirement for any retrofit technology is clearly that there be enough space available to accommodate all of the new plant that needs to be fitted whilst retaining sufficient access to both existing and new plant both during construction and operation. Accordingly one of the key goals of any assessment of a plant for capture readiness should include an assessment of the plant elements that would be required for a retrofit, their place in the plant layout and their physical size.

A further key element in the assessment of a site for capture-readiness is that it should have identified a credible route to storage of the CO_2, once captured including a credible method of shipping or piping the CO_2 to that sink.

Such issues are clearly specific to a particular site and are not dealt with in this report. However it is essential that any company seeking to develop a plant that may be used for capture has fully assessed potential sinks for the material and has, as far as reasonable, ascertained that they will be legal, durable and accessible. It is possible that law on CO2 storage will take some time to stabilise so will not be fully defined when a capture-ready plant is permitted and built.

6.3. Possible Capture Ready Pre-Investment Options

There are numerous pre-investment options. These may or may not be adopted depending on a project developer's view of their cost-effectiveness and desirability, particularly the degree of lock-in to a particular technology. The possible options for each generating technology are reviewed for a number of technologies in the following sections.

7. DESIGN REVIEW: PF POWER PLANT WITH POST COMBUSTION CO_2 CAPTURE-READY FEATURES

7.1 Overview

Pulverised Fuel (PF) Power Plants equipped with post combustion amine scrubbing technology offer one route to capture CO_2. This technology coupled with today's best available Advanced Supercritical (ASC) Boiler (290 bara main steam pressure, 600°C main steam temperature, 620°C reheat steam temperature) and steam turbine significantly minimises the penalty from CO_2 capture compared with that from less efficient plants. The post combustion capture-ready PF power plant discussed in this report focuses on amine based absorption processes for CO_2 capture.

The post combustion capture technology involves capture of CO_2 with an amine scrubber unit installed downstream of the Flue Gas Desulphurisation (FGD) unit. Figure 7.1 presents a block flow diagram of a typical Advanced Supercritical Pulverised Fuel (ASC PF) Power Plant with CO_2 capture based on post combustion amine scrubbing technology. Studies undertaken to date on capture of CO_2 using post combustion amine scrubbing technology in PF Power Plants infer the following:

- ◊ No modifications are required to conventional PF boiler designs to introduce post combustion based CO_2 capture.
- ◊ A high efficiency FGD plant will be required to meet the stringent SO_X level limits of the amine scrubber.
- ◊ Modifications to conventional PF power plant steam turbine designs are required to enable extraction of significant quantity of low pressure steam for amine solvent regeneration. These modifications are based on existing, commercially available and well proven steam turbine technologies.
- ◊ The amine scrubbing plant and auxiliaries required to separate and release CO_2 are based on commercially available technologies [it should be noted that industrial scale CO_2 separation processes for clean gas are proven and commercially available and development of CO_2 separation processes for coal derived flue gas is primarily based on this proven technology].
- ◊ The technology is sufficiently well understood to allow the design of the rest of the power plant to be made capture-ready.

The key features that distinguish an ASC PF Power Plant with post combustion amine scrubbing CO_2 capture from that of ASC PF Power Plant without CO_2 capture are:

- ◊ Flue gas desulphurisation (FGD) unit designed to reduce SO_X in flue gas to very low levels (10 to 30 mg/Nm^3 @ 6% O_2 v/v dry), i.e. levels lower than the limits imposed by current environmental regulations (e.g. 200 mg/Nm^3 @ 6% O_2 v/v dry per EU's Large Combustion Plant Directive). This requirement is to minimise the solvent degradation due to reaction with SO_2.
- ◊ Extraction of a large quantity of low pressure steam from the IP/LP cross-over pipe (around 50% of steam leaving IP turbine) to stripper reboiler for amine regeneration and CO_2 release.

Figure 7.1: Typical Post Combustion ASC PF (Bituminous) CO_2 Capture Power Plant - Block

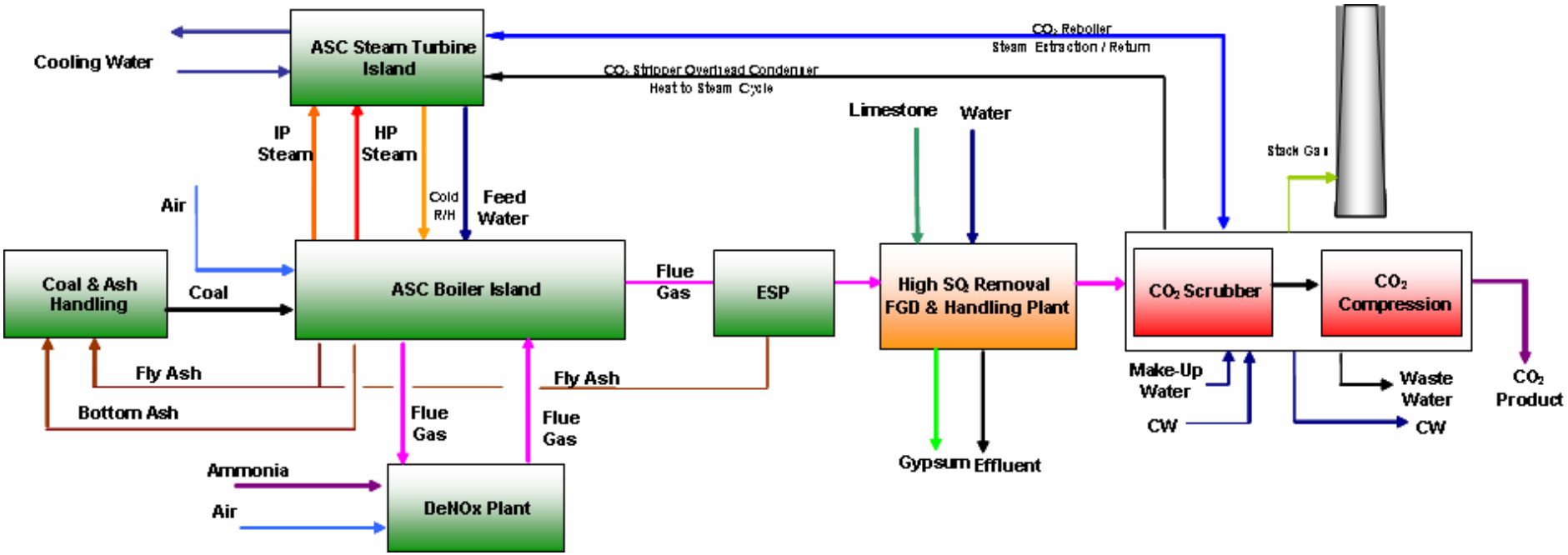

- incorporation of amine scrubbing plant to separate and release CO_2 from flue gas stream, which includes the following:
  i. Flue gas cooler
  ii. Absorber column
  iii. Stripper column
  iv. Reboiler
  v. Overhead condenser
  vi. Amine storage and handling system
  vii. Spent amine disposal or recycling systems
- Heat recovery from amine scrubbing plant and CO_2 compression plant into condensate system.
- CO_2 compression plant for compressing CO_2 to a pressure of about 110 bar for transport via pipelines.

7.2 'Essential' Capture-Ready Requirements: Post Combustion Amine Scrubbing Technology based CO_2 Capture

The capture-ready requirements discussed in this section are the 'essential' requirements which aim to ease the capture retrofit of PF Bituminous Power Plants with post combustion amine scrubbing technology based CO_2 capture. The capture-ready features discussed require small additional investment and also have low impact on plant performance whilst operating without capture.

7.2.1 Power Plant Location

The location of the plant plays a major role in determining its suitability for CO_2 capture as, after capture plant addition, the captured CO_2 needs to be transported for geological storage and/or enhanced oil recovery (EOR). The selection of location should consider the following, in addition to those normally considered for any conventional PF Power Plant without CO_2 capture:

- Proximity to CO_2 storage and/or other CO_2 user location; this will enable ease of transport and reduction in transportation cost.
- Proximity to other existing or upcoming power generating stations; this could enable sharing of CO_2 pipelines leading to lower CO_2 transport costs. Furthermore, risks associated with opposition from public for building new plants are generally lower for sites with an established industrial presence.

The 'location feasibility study' should consider the following factors also in addition to the factors that would be normally considered for a conventional PF Power Plant without CO_2 capture.

- CO_2 transport via pipelines to the storage location, including safe transportability and considerations on shared CO_2 pipelines (or) ship transport for coastal sites.
- Health and safety issues related to CO_2 transportation.
- Health and safety issues related to handling of amines.

7.2.2 Space Requirements

The prime requirement for the construction ASC PF power plants as capture-ready power plants to utilise post combustion capture technology for CO_2 capture, is the allocation of sufficient additional space at appropriate locations on the site to accommodate the additional CO_2 capture equipment. A further requirement is to allow extension of balance of plant (BoP) equipment to cater for any additional

requirements (cooling water, auxiliary power distribution etc.) of the capture equipment. Space will be required for the following:

- ◊ CO_2 capture equipment.
- ◊ Boiler island additions and modifications (e.g. space for routing flue gas duct between ID fan and amine scrubber).
- ◊ Steam turbine island additions and modifications (e.g. space in steam turbine building for routing large low pressure steam pipe to amine scrubber unit).
- ◊ Extension and addition of balance of plant systems to cater for the additional requirements of the capture equipment.
- ◊ Additional vehicle movement (amine transport etc.).
- ◊ Space allocation based on hazard and operability (HAZOP) management studies, considering storage and handling of amines and handling of CO_2.

The space requirements are also discussed under individual system and equipment requirements.

7.2.3 ASC PF Boiler and Auxiliaries

The ASC PF boiler and auxiliaries with post-combustion capture-ready features is not noticeably different from a conventional air-fired ASC PF boiler. The boiler proper (combustion equipment, furnace, convection heat transfer surfaces) and air heater are essentially the same as that of conventional ASC PF boiler without CO_2 capture. The essential system and equipment requirements for the construction of ASC PF boilers as capture-ready plants to utilise post-combustion capture technology for CO_2 capture are outlined below:

- ◊ Combustion equipment, Pressure Parts, Air heater

  Boiler combustion equipment (mills, burners), all pressure parts and the regenerative air pre-heater do not require any modifications for CO_2 capture-retrofit with amine scrubber and hence no essential capture-ready requirements are foreseen.

- ◊ Air and Flue Gas System

  i. <u>Air system</u>: The CO_2 capture retrofit with amine scrubber does not call for any changes to the combustion air system of the boiler and no essential capture-ready requirements are foreseen in this system. Also the Forced Draught (FD) fans and the Primary Air (PA) fans do not need any modifications for CO_2 capture retrofit with amine scrubbing.

  ii. <u>Flue gas system</u>: Space for installing new duct work to enable interconnection of the boiler flue gas system with the amine scrubbing plant and provisions in the ID fan discharge duct work (for tie-ins, addition of bypass dampers, isolation dampers) will be required as a minimum. Other essential requirements in boiler flue gas system may have to be considered based on the flue gas cleaning equipment selection and design. These are discussed below:

     - ➢ *For PF power plants with $DeSO_X$ plant (FGD) designed to cater for future requirements*, no additional requirement is foreseen.
     - ➢ *For PF power plants with FGD designed to meet current SO_X emission limits*, essential capture-ready requirements may arise based on the design of the FGD plant. This is discussed below:

(a) If the original FGD plant design and construction allows mechanical or chemical enhancement in the future to meet the amine scrubber SO_X level limits, no essential capture-ready requirement is foreseen in the flue gas system.

(b) If the original FGD plant design and construction do not allow mechanical or chemical enhancement, then an FGD polisher to meet the amine scrubber SO_X level limits will be required. The ID fan may not be able to accommodate the additional pressure drop introduced by the FGD polisher and a booster fan may be required. Hence space to install the booster fan and associated duct work and provisions for tie-ins shall have to be considered.

- *For power plants without any $DeSO_X$ measures*: Space at appropriate location for installing a $DeSO_X$ plant along with connecting duct work and provisions in the ID fan discharge duct for interconnection with consideration of new ID fans/ booster fan(s), as appropriate.

7.2.4 $DeNO_X$ Equipment

NO_X produced from coal firing is mainly NO and with up to 5% NO_2. NO does not react with amines, but NO_2 does. NO_2 concentration of around 40 mg/ Nm^3 (@ 6% O_2 v/v dry) is considered acceptable for further processing of the flue gas in amine scrubbing plant [22]

The NO_2 concentration in flue gas at the inlet to amine scrubbing plant vary based on the upstream NO_X control measures and the type of FGD plant considered in the boiler island. The essential capture-ready requirements will also vary based on the NO_X control measures considered in the plant. These are discussed below:

- *For plants incorporating post combustion $DeNO_X$ measures (SCR or SNCR) to limit NO_X to the EU LCPD limit of 200 mg Nm^3 @ 6% O_2 v/v*: The NO_2 concentration is expected to be some 10 mg/Nm^3 at the FGD inlet and lower still at the wet FGD outlet (if installed- NO_2 can be part-captured in a wet FGD). Hence no essential capture-ready requirements are foreseen.

- *For plants incorporating only in-furnace NO_X control measures (low NO_X burners, two stage combustion air systems):* With in-furnace NO_X control measures NO_X concentration in flue gas can be limited to some 500 to 600 mg/Nm^3 @ 6% O_2 v/v for most coals. The NO_2 concentration in boiler outlet flue gas is expected to be some 25 to 30 mg/Nm^3 (*@ 6% O_2 v/v)*. Hence no essential capture-ready requirements are foreseen.

  It should be noted that, for plants incorporating only in-furnace NO_X control measures, NO_X concentration in flue gas at furnace outlet in PF boilers firing certain type coals may be higher than 600 mg/Nm^3 @ 6% O_2 v/v. If the NO_X concentration exceeds 800 mg/Nm^3 @ 6% O_2 v/v, NO_2 concentration may exceed 40 mg/Nm^3 @ 6% O_2 v/v. In such cases, sufficient space and provisions should be made available in the boiler island to install additional combustion controls or post combustion $DeNO_x$ equipment (SCR or SNCR) to reduce the NO_X concentration to required levels. This requirement may not arise even up to NO_X concentration of some 1150 mg/Nm^3 @ 6% O_2 v/v, if wet FGDs are employed, as NO_2 can be part-captured in wet FGDs.

[22] Howard T, Feraud A and Marocco L CASTOR Study on Technological Requirements for Flue Gas Clean-Up Prior to CO_2 Capture: 8th International Conference on Greenhouse Gas Control Technologies Trondheim, Norway, 19-22 June 2006

7.2.5 Particulate Removal Unit (ESP/ Bag Filter)

A conventional PF power plant is normally fitted with an electrostatic precipitator (ESP) or bag filter designed to meet the particulate emission level limits imposed by environmental regulations (30 mg/Nm^3 to as high as 150 mg/Nm^3 @ 6% O_2 v/v dry - depending on the country of installation).

During capture retrofit, to meet the amine scrubber flue gas inlet quality requirements, the PF power plants have to be provided with a flue gas desulphurisation (FGD) unit and a flue gas cooler (FGC) [FGC supplied along with the amine scrubber]. With this arrangement [ESP or bag filter to meet current particulate emission level limits + FGD + FGC] and depending on the type of FGD (e.g. wet FGD, dry FGD) and FGC (e.g. direct contact type) selected, the particulate level at inlet to the amine scrubber will vary from as low as 5 mg/Nm^3 to as high as 150 mg/Nm^3 @ 6% O_2 v/v dry.

No concerns have been raised (so far) by suppliers of amine scrubbers for flue gas particulate levels up to 5 mg/Nm^3 @ 6% O_2 v/v dry[22]. Presence of dust might have long term significance for the amine scrubber operation, particularly those with rigid rather than random packing. Hence some essential capture-ready requirements may be required to reduce particulate levels in the flue gas at least to about 5 mg/Nm^3 @ 6% O_2 v/v dry. These essential requirements depend on the type of FGD and FGC selected and are discussed below:

◊ *Plants with ESP or bag filter, wet FGD and future direct contact type flue gas cooler*: Wet FGD plants are very effective at removing dust from flue gas, and the dust concentration in the outlet flue gas would be expected to be in the region of 5 mg/Nm^3 @ 6% O_2 v/v dry or less[22]. Furthermore, the downstream direct contact type flue gas coolers (supplied along with amine scrubber plant) are also very effective in removing the dust from flue gas. Hence no essential capture-ready requirements are foreseen for PF power plants with such flue gas cleaning schemes.

◊ *Plants with ESP or bag filter, dry FGD and future direct contact type flue gas cooler*: Dry FGDs do not contribute to particulate removal. However, the downstream direct contact type flue gas coolers are very effective in removing the dust from flue gas. Hence no essential capture-ready requirements are foreseen for plants with such flue gas cleaning schemes.

◊ *Plants with ESP or bag filter, dry FGD plant and other type of flue gas cooler*: With this arrangement, if the dust concentration in flue gas at flue gas cooler outlet is expected to be higher than 5 mg/Nm^3 @ 6% O_2 v/v dry, space should be made available at the discharge side of the particulate removal equipment (example: extra length straight duct, which can be removed later for additional module installation) to enable incorporation of additional particulate removal modules (fields) to meet amine scrubber requirements.

For plants with ESP, SO_3 injection and/or flue gas humidification upstream of the ESP will contribute to additional particulate removal. Hence, instead of space provisions to add ESP modules, provisions in the ESP inlet duct for incorporating SO_3 injection or flue gas humidification in future may be considered.

7.2.6 Flue Gas Desulphurisation Unit

SO_2 concentration limits in the flue gas of the order of 10 to 30 mg/Nm^3 (6% O_2 v/v dry) will be required to be achieved to avoid amine degradation. This requirement, imposed by the amine scrubber, is very much lower than the emission levels imposed by current environmental regulations (e.g. 200 mg/Nm^3, 6% O_2 v/v dry as

per European LCPD). Hence the FGD or other $DeSO_X$ measures that would be considered for a conventional plant to meet environmental regulations will not be adequate to meet the amine scrubber requirements. The available options and the essential capture-ready requirements are discussed below:

- ◊ Selection of an appropriate FGD plant to deliver the required SO_2 removal efficiencies suitable for meeting amine scrubber requirements (such FGDs may require additional initial investment and lead to additional operating expenses compared to that of the other options discussed below). It should be noted that well proven FGD plants capable of reducing SO_X levels down to tens of mg/Nm^3 are commercially available today. For PF power plants equipped with such FGD units, no essential capture-ready requirements are foreseen.
- ◊ The initial FGD installation may be capable of being upgraded via mechanical or chemical enhancement (e.g. the addition of more spray banks or the use of dibasic acids respectively) to meet the SO_2 limit of an amine scrubber. To enable this, provision should be made in the initial installation to allow the FGD plant to be upgraded to meet the more stringent performance target.
- ◊ An additional polishing unit, in effect a secondary, smaller FGD scrubber, could be installed in future to meet the amine scrubber requirements. To accommodate this polishing unit along with the required duct work, sufficient space should be kept adjacent to the main FGD plant.

7.2.7 Steam Turbine Generator and Auxiliaries

For PF power plants retrofitted with post combustion based capture systems, a common requirement for capture systems using water-based solvent mixtures (e.g. amines) is for significant amounts of heat at 110 ºC to120ºC for solvent regeneration. In most cases this is best supplied by withdrawing steam from the main steam cycle at the IP/LP crossover pipe between the intermediate pressure (IP) and low pressure (LP) turbine cylinders. The optimum supply pressure (allowing for pressure drops in pipe work and valves) is about 3.6 bara.

With the current generation of amines, almost 50% of the low pressure steam from the steam turbine IP/LP cross-over pipe will be required for regeneration of the amine solvent to release CO_2.

To enable extraction of steam for use in the amine reboiler, as an essential capture-ready feature, the IP/LP cross-over pipe should have provisions to accommodate the required valves and tie-ins for connecting the extraction steam piping. Furthermore, the steam turbine building should have space provisions to route the large LP steam pipe. This is discussed in Section 7.2.8.

After capture retrofit, the steam turbine LP section will see a major flow reduction due to extraction of almost 50% of the steam before the LP section for use in the amine scrubber. The steam turbine can either be operated with the original design LP exhaust pressure (condenser pressure) or operated to achieve the best condenser vacuum to maintain LP stage volumetric flow to its optimum point as far as possible. This is discussed further in Section 7.2.9.

7.2.8 Water - Steam - Condensate Cycle

Process integration opportunities to recover low grade heat from the capture equipment into the water-steam-condensate cycle will be available after capture retrofit. Utilising these opportunities will minimise the penalty from CO_2 capture. Bypass of a few of the regenerative condensate feed water heaters, provided in a conventional PF Power Plant, will be required to enable this integration after the CO_2 capture retrofit.

To facilitate the above, a capture-ready plant should consider the following for low grade heat recovery:

◊ Provisions in the water steam cycle enabling bypass of the required number of condensate feed water heaters.

◊ Provisions for process integration with the amine scrubber plant [e.g. provision in the condensate pipe work in the LP heater area for admission of condensate from the amine scrubber overhead condenser].

Furthermore, provision and space should be kept in the steam turbine island to enable routing of the new large LP steam pipe between the steam turbine and amine scrubber plant reboiler. This should consider the following as a minimum:

◊ Provisions in steam turbine building, building pipe racks and building support structure to enable routing and supporting of the large steam pipe work.

◊ Provisions in steam turbine and plant steam piping drain systems to handle additional drains from this new pipe work.

7.2.9 Cooling Water System

The amine scrubber, flue gas cooler and CO_2 compression plant introduced for CO_2 capture increase the overall power plant cooling duty. Despite this, no essential capture-ready requirement is foreseen, except for space and provisions for tie-ins. This is explained herein:

After capture retrofit, the steam turbine LP section will see a major flow reduction due to extraction of almost 50% of the steam before the LP section for use in the amine scrubber. The steam turbine can either be operated with the original design LP exhaust pressure (condenser pressure) or operated to achieve the best condenser vacuum to maintain LP stage volumetric flow to its optimum point as possible. The main turbine condenser cooling water demand for either case is discussed below:

◊ Operating with the original design condenser pressure after the capture retrofit will allow reduction in cooling water mass flow rate to the condenser.

◊ Operating with best achievable condenser pressure can be accomplished with either the original condenser design cooling water mass flow rate (with lower temperature rise across the condenser) or with reduced cooling water mass flow rate (lower reduction in cooling water flow compared to the previous case).

In either case, the main condenser cooling water mass flow rate does not increase. Hence, the main turbine condenser cooling water system does not require any modification for capture retrofit. The essential requirements are only to cater for the additional cooling load of the capture plant auxiliaries and these are discussed below:

◊ For steam turbines operating with the original design LP exhaust pressure before and after capture retrofit, it is expected that by using the surplus cooling water made available from the main turbine condenser and with an appropriate cooling water scheme, the plant total cooling water mass flow rate (not cooling duty) can be maintained at a similar level prior to and after capture retrofit. However, as more heat is rejected to the cooling water system after capture retrofit, the plant cooling load will increase. To accommodate the additional cooling load, the following essential requirements are foreseen:

i. *For PF Power Plants with closed cycle cooling water system with cooling towers*: Space to add cooling towers or cooling tower modules and

provisions to tie-in with the already installed cooling water system network.

ii. *For PF Power Plants with once through fresh water cooling system*: If the plant total cooling water mass flow rate is maintained at the same level prior to and after capture retrofit, the discharge temperature of the cooling water will increase after capture retrofit. If local regulations and original permit(s) allow discharge at slightly higher temperature, no essential capture-ready requirement is foreseen, except for having provisions in the discharge network for extending the discharge pipe work for distribution of the return water over a wider area. If higher discharge temperatures are not permitted, then sufficient space shall be considered to add a discharge side cooling tower or to add a separate cooling water system to cater for the additional requirements.

iii. *For power plants with once through sea water cooling system (main) and fresh water closed loop auxiliary cooling water system*: Space shall be kept to add fresh water cooling towers or modules to cater to the additional cooling water demand. Addition of fresh water cooling towers or modules can be avoided, if auxiliaries' cooling is also carried out with sea water. However, as discussed above for once through fresh water cooling, if discharging sea water at a higher temperature is not permitted, then sufficient space shall be considered to add a small discharge side sea water cooling tower or to add a separate cooling water network to cater for the additional requirements.

◊ For steam turbines operating with lower LP exhaust pressure compared to that of the original plant, no additional essential requirements are foreseen. Additional cooling water requirements of the capture plant auxiliaries can be met by addition of a separate auxiliary cooling water network during the capture retrofit.

7.2.10 Compressed Air System

The capture equipment addition will call for additional compressed air (both service air and instrument air) requirements. To cater for the future additional compressed air requirements, the following are foreseen as essential requirements:

◊ Space for addition of compressors and compressed air system components (additional instrument air driers, instrument air receivers).

◊ Sizing of compressed air distribution headers to accommodate additional compressed air from newly added compressors and to handle distribution to additional consumers.

◊ Other provisions for tie-ins in the system.

7.2.11 Raw Water Pre-treatment Plant

Space shall be considered in the raw water pre-treatment plant area to add additional raw water pre-treatment streams, as required.

7.2.12 Demineralisation / Desalination Plant

No essential capture-ready requirements are foreseen, as the demineralised water requirement is not expected to increase after CO_2 capture retrofit.

7.2.13 Waste Water Treatment Plant

Amine scrubbing plant along with flue gas coolers and FGD Polishing unit (if appropriate) provided for post combustion CO_2 capture will result in generation of additional effluents. This includes provision for the amine waste, e.g. storage and

transport offsite, or treatment and recycle may also be required. Hence, the waste water treatment plant area should have space for expansion and provisions for integration with the additional treatment stream(s) to be installed during CO_2 capture retrofit.

7.2.14 Electrical

The introduction of amine scrubber plant along with flue gas coolers, FGD polisher (if appropriate), booster fans (if required), and CO_2 compression plant will lead to a number of additional electrical loads (e.g. pumps, compressors). The following essential capture-ready requirements should be considered:

- ◊ Space for additional unit auxiliary transformer (UAT).
- ◊ Provisions in bus ducts to feed the UAT and for power distribution to auxiliaries.
- ◊ Provisions in underground cable trenches and above ground cable trays to accommodate additional cables.
- ◊ Space for extension of low voltage (LV) and high voltage (HV) switch gears to accommodate additional incomers, feeders and motor control centres (MCC).

7.2.15 Chemical Dosing Systems and Steam Water Analysis System

As no difference in requirements exist before and after CO_2 capture retrofit in the condensate and feed water chemistry, no capture-ready requirements are foreseen in the chemical dosing systems.

With process integration after capture equipment addition, monitoring of condensate water quality at the outlet of heat exchangers is foreseen, as part of the heating of the condensate will be undertaken by the amine scrubber plant overhead condenser. However, this is not foreseen as an essential requirement.

7.2.16 Plant Pipe Racks

Installation of additional pipework after retrofit with capture will be required due to the use of a large quantity of LP steam in the amine scrubbing plant reboiler, return of condensate into the water-steam-condensate cycle and process integration of capture equipment with the water-steam-condensate cycle. Additional pipework broadly includes:-

- ◊ Large LP steam pipe between steam turbine and reboiler.
- ◊ Reboiler condensate return piping between reboiler and LP heater area.
- ◊ Water-steam-condensate piping between amine scrubbing plant reflux condensers and LP heater area.
- ◊ Drain piping from the large LP steam pipe to reboiler.
- ◊ Cooling water piping to flue gas cooler and CO_2 compressor inter cooler(s).

To accommodate the above pipe work for the CO_2 capture retrofit, the capture-ready plant should have space at appropriate locations (in particular the steam turbine building) to route the new piping.

7.2.17 Control and Instrumentation

The incorporation of CO_2 capture equipment and integration between power island equipment and CO_2 capture equipment calls for introduction of additional control components and control loops to ensure reliable and safe operation of the power plant. Additional inputs and outputs (I/Os) resulting from this need have to be handled by the plant control system. This will call for additional control modules or

panels, monitoring systems, additional cabling as well as change in control software. Hence a capture-ready plant should consider the following as a minimum, to enable incorporation of additional control systems:

- ◊ Space and provisions for extension of control room.
- ◊ Space and provisions in cable floor to accommodate additional control/ signalling cables.

7.2.18 Safety

As the introduction of CO_2 capture leads to additional hazards compared to that of a conventional plant without CO_2 capture, as an essential requirement, the capture-ready plant should have a hazard and operability (HAZOP) management study considering capture equipment. This will enable proper disposition and selection of all equipment based on the hazard level defined by regulations. The following should be undertaken as a minimum:

- ◊ Assessment to meet relevant regulations for handling and storage of amine solvents.
- ◊ Assessment on health and safety issues related to CO_2 compression and high pressure CO_2 transportation.

7.2.19 Fire Fighting and Fire Protection System

Extension of plant fire hydrant network to cater to the capture equipment area is foreseen. These requirements can be met by simply keeping provisions in the plant fire hydrant network enabling subsequent introduction of additional fire hydrant points.

7.2.20 Plant Infrastructure

Space at appropriate zones to widen roads and add new roads (to handle increased movement of transport vehicles), space to extend office buildings (to accommodate additional plant personnel after capture retrofit) and space to extend stores building are foreseen as essential requirements. Consideration should also be given to how, during a retrofit, vehicles or cranes will access the areas where new equipment will need to be erected.

7.2.21 Design, Planning Permissions and Approvals

A study should be undertaken to ensure that all technical reasons that would prevent installation and operation of CO_2 capture have been identified and eliminated.

It may be beneficial, given local drivers, to obtain planning permissions and similar approvals for eventual retrofit of capture to a plant, but this is not considered to be an essential requirement.

7.3 Possible Pre-Investment Options: Post Combustion Amine Scrubbing Technology based CO_2 Capture.

The capture-ready options discussed in this section require some pre-investment, to further ease the retrofit of PF Power Plants with post combustion amine scrubbing technology based CO_2 capture. These options are not essential to make a PF plant capture-ready and should only be considered if a clear economic benefit can be shown through a life cycle analysis (see Section 11 below).

Considerations of the capture-ready options discussed in this section will ease the capture retrofit, reduce plant down-time for retrofit, improve the plant performance

and reduce the penalty from CO_2 capture after capture retrofit (compared to those of plants having only the essential capture-ready features or no capture-ready features).

7.3.1 ASC PF Boiler and Auxiliaries

Some possibilities exist for capture-ready pre-investment in the ASC PF boiler draught plant equipment. These are discussed below:

◊ *For PF power plants with $DeSO_X$ plant (FGD) designed to cater for future requirements*, no capture-ready pre investment is foreseen.

◊ *For PF power plants with FGD designed to meet current SO_X emission limits*, no capture-ready pre investment is foreseen. This is explained below:

i. If the original FGD plant design and construction allows mechanical or chemical enhancement in the future to meet the amine scrubber SO_X level limits, the increase in pressure drop across the FGD plant after this chemical or mechanical enhancement is small. ID fans provided in the original plant should be able to accommodate this additional pressure drop and hence no capture-ready pre investment is foreseen.

ii. If the original FGD plant design and construction do not allow mechanical or chemical enhancement, then an FGD polisher to meet the amine scrubber SO_X level limits will be required. The ID fans normally provided for a conventional boiler without capture will probably have insufficient margins to accommodate the FGD polisher and associated duct work pressure drop, unless they are designed to take into account these future requirements. Pre-investment can be made in designing the ID fan considering these future requirements, either with spare capacity, or with the provision to uprate the motor at the time of retrofit. This pre-investment could the eliminate booster fan requirement for the future FGD polisher.

◊ *For new-build power plants without any $DeSO_X$ measures*: A FGD plant needs to be installed during capture retrofit to cater for the amine scrubber requirements. The ID fans normally provided for a conventional boiler without capture will probably have insufficient margins to accommodate the FGD and associated duct work pressure drop, unless they are designed to take into account these future requirements. Pre-investment (as above) can be made in designing the ID fan considering these future requirements. This pre-investment would eliminate the booster fan requirement for the FGD.

7.3.2 $DeNO_X$ Equipment

Consideration of capture-ready pre-investment in $DeNO_X$ plant depends on the original new-build plant design NO_X emission level limits. Capture-ready pre-investments that may be of value are discussed below:

◊ *For plants incorporating post combustion $DeNO_X$ measures (SCR or SNCR) to limit NO_X to EU LCPD limit of 200 mg/ Nm^3 @ 6% O_2 v/v*: The $DeNO_X$ measures normally provided in a conventional PF plant to limit NO_X to 200 mg/ Nm^3 (EU LCPD limits) are considered adequate to meet the amine scrubber requirements. Hence, capture-ready pre-investments are not required for such plants. Also refer to discussions in Section 7.2.4.

◊ *For plants incorporating only in-furnace NO_X control measures* (low NO_X burners, two stage combustion air systems): No capture-ready pre-investment is foreseen for plants having in-furnace $DeNO_X$ measures to limit NO_X concentration in flue gas to some 800 mg/Nm^3 @ 6% O_2 v/v (Note: With in-

furnace NO_X control measures NO_X concentration in flue gas can be limited to some 500 to 600 mg/Nm^3 @ 6% O_2 v/v for most coals).

If the NO_X concentration exceeds 800 mg/Nm^3 @ 6% O_2 v/v, the NO_2 concentration will exceed 40 mg/Nm^3 @ 6% O_2 v/v. For such cases, additional combustion controls, SCR or SNCR will be required to reduce the NO_X concentration in the flue gas to meet the amine scrubber requirements. Installation can be undertaken simultaneously with CO_2 capture retrofit and no capture-ready pre-investment is foreseen for such plants.

7.3.3 Particulate Removal Unit (Electrostatic Precipitator / Bag Filter)

Considerations of capture-ready pre-investment in the particulate removal system depend on the original new-build plant design particulate emission level limits and the type of $DeSO_X$ equipment used for SO_X removal. Capture-ready pre-investments that may be of value for various flue gas cleaning schemes are discussed below:

- ◊ *Plants with ESP or bag filter, wet FGD and future direct contact type flue gas cooler*: No capture-ready pre-investment is foreseen for plants with such flue gas cleaning schemes. Also refer to discussions in Section 7.2.5.
- ◊ *Plants with ESP or bag filter, dry FGD and future direct contact type flue gas cooler*: No capture-ready pre-investment is foreseen for plants with such flue gas cleaning schemes. Also refer to discussions in Section 7.2.5.
- ◊ *Plants with ESP or bag filter, dry FGD plant and other type of flue gas cooler*: With this arrangement, if the dust concentration in the flue gas at the flue gas cooler outlet is expected to be higher than 5 mg/Nm^3 @ 6% O_2 v/v dry, pre-investment can be made in providing the ESP or bag filter with empty (dummy) modules for future incorporation of internals to meet the amine scrubber requirements. Also refer to discussions in Section 7.2.5.

7.3.4 Flue Gas Desulphurisation Unit

SO_X concentration limits in the flue gas of the order of 10 to 30 mg/Nm^3 @ 6% O_2 v/v dry will be required to prevent amine solvent degradation. FGD or other $DeSO_X$ measures that would be considered for a conventional plant to meet environmental regulations will not be adequate to meet this limit. Hence, the following can be considered for pre-investment:

- ◊ *Installation* of FGD unit designed to meet the required 10 to 30 mg/Nm^3 6% O_2 v/v dry from initial start-up. Such a plant will impact plant efficiency during operation before the retrofit is carried out.
- ◊ *Provisions* in the FGD unit for planned retrofits to meet the future SO_X level limits.

7.3.5 Steam Turbine Generator and Auxiliaries

Refer to 'Possible steam turbine options' in Section 7.3.19, where these options are discussed further.

7.3.6 Water - Steam - Condensate Cycle

Capture-ready pre-investment, which is considered to be of value in the water-steam-condensate system, is discussed below:

During plant operation with post combustion CO_2 capture, almost 50% of the steam from the steam turbine IP/LP cross-over pipe is required for the amine scrubbing plant reboiler (based on current amine based solvents) and the balance will pass through the steam turbine condenser. This reduces the condensate flow from the condenser to almost 60% of the original flow (flow before capture retrofit). The

condensate system arrangement in a PF power plant often consists of either 2 x 100% condensate pumps or 3 x 50% condensate pumps. This arrangement will lead to pump operation at non-optimum conditions after the capture retrofit. To enable condensate pumps to operate at optimum conditions before and after capture retrofit, pre-investment can be considered in using a 3 x 60% condensate pumps arrangement in the condensate system.

7.3.7 Cooling Water System

As discussed in Section 7.2.9, additional cooling tower and additional cooling water piping requirements depend on the type of cooling water system envisaged (closed loop cooling or once through cooling with sea water/fresh water). The following pre-investments can be made to ease the CO_2 capture retrofit.

- ◊ *For PF power plants with once through fresh water cooling system*: If local regulations or permits that have already been obtained do not allow an increase in discharge water temperature beyond the limit agreed before the capture retrofit, pre investments can be made to accommodate the additional estimated flow in the cooling water supply and discharge network (i.e. larger cooling water pumps and larger cooling water pipes.
- ◊ *For PF power plants with closed loop cooling system*: No capture-ready pre-investment is foreseen to be of value, as addition of a separate auxiliary cooling water network during capture retrofit to cater for the capture equipment auxiliary cooling water requirement is considered to be a more viable option.
- ◊ *For PF power plants with once through sea water cooling system*: If local regulations and permits do not allow an increase in the discharge water temperature beyond the limit agreed before the capture retrofit, pre investments can be made to accommodate the additional estimated flow in the cooling water supply and discharge network.

7.3.8 Compressed Air System

As capture equipment addition calls for additional compressed air requirements, considerations can be given to the following pre-investment option:

- ◊ Sizing and selection of capture-ready plant's compressed air system including the estimated future compressed air requirements. This may call for a marginal increase in the capacity of individual compressors, and a corresponding increase in capacity of the driers and receivers.

7.3.9 Raw Water Pre-Treatment Plant

To cater for the future additional cooling water requirements of the capture equipment, pre-investment can be made in the capture-ready plant's raw water pre treatment plant area by:-

- ◊ Including estimated future additional raw water treatment plant capacity in sizing and selection of capture ready plant's raw water pre treatment plant.
- ◊ Increase in storage capacity of raw water tank to cater to future increase in storage requirements.
- ◊ Raw water make-up selection and sizing including the future increase in demand.

7.3.10 Demineralisation / Desalination Plant

No capture-ready pre-investment is foreseen in this system, as the demineralised water requirement is not expected to increase after the CO_2 capture retrofit.

7.3.11 Waste Water Treatment Plant

Modifications and additions to waste water treatment plant are foreseen for capture retrofit to enable the plant to treat and safely dispose of the additional effluent from the capture equipment. As the effluent may need a different treatment regime, a separate waste water treatment system will have to be installed and interconnected with the plant waste water discharge network. Hence no pre-investment in the capture-ready plant's waste water treatment to cater to this requirement is considered worthwhile as this separate treatment system can be installed in future along with the capture retrofit.

7.3.12 Electrical

The introduction of amine scrubbing along with flue gas cooler, FGD polisher (if appropriate) and CO_2 compression plant will lead to a number of additional electrical loads (pumps, fans, compressors) and will call for major additions in the plant auxiliary power distribution system. Consideration of pre-investment in the following areas is expected to ease the CO_2 capture retrofit.

- ◊ Design and construction of cable vaults and cable trenches including pull pits and over head cable trays to handle future cabling work.
- ◊ Switchgear and Motor Control Centre (MCC) energizing cable selection considering estimated additional auxiliary power consumption after capture retrofit (excluding power consumption by amine scrubber unit and CO_2 compression plant, as auxiliary loads for these equipment are considered to be met with a dedicated and separate power supply system).

7.3.13 Chemical Dosing Systems and Steam Water Analysis System

As no difference in requirements in the condensate and feed water chemistry exist for the CO_2 capture retrofit, no capture-ready pre-investments are foreseen in the chemical dosing plant.

With process integration after capture equipment addition, monitoring of condensate water quality at the outlet of heat exchangers is foreseen, because part of the heating of the condensate will be undertaken in the amine scrubber plant. Pre-investment can be considered for provision in the steam and water analysis system sampling network and panels for easy addition of these sampling points.

7.3.14 Plant Pipe Racks

Consideration of pre-investment in the areas listed below will ease the addition of new pipe work required for the retrofit. Refer to Section 7.2.16 for a list of pipe work required for capture retrofit.

- ◊ Design of pipe rack structures (in the vicinity of respective systems) to handle additional pipe loads.
- ◊ Provisions in pipe racks in the vicinity of the respective systems to accommodate additional piping.
- ◊ Provisions in the steam turbine building to route larger LP steam pipe.

7.3.15 Control and Instrumentation

The incorporation of amine scrubber and CO_2 compression plant and process integration of the water-steam-condensate cycle with the capture equipment calls for introduction of additional control components and control loops to ensure reliable and safe operation of the power plant. Additional I/Os resulting from this need to be handled by the plant control system. This will call for additional control modules and

panels, monitoring systems and additional cabling. Based on the estimated additional I/O s, pre-investment can be made in:-

- ◊ Designing the plant control system including the estimated additional I/Os required in the future.
- ◊ Sizing the plant network (data highway) to handle (estimated) future additional signals.

It should be noted that often DCS and Historian systems are licensed for a specified number of I/O channels and may not allow easy expansion. The above pre-investments could eliminate this risk and ease the integration of the capture equipment control system with the main plant control systems.

7.3.16 Safety

No capture-ready pre-investment is foreseen.

7.3.17 Fire Fighting and Fire Protection System

No capture-ready pre-investment is foreseen.

7.3.18 Plant Infrastructure

No capture-ready pre-investment is foreseen.

7.3.19 Steam Turbine Options: Post Combustion CO_2 Capture Systems using Amine Solvents Regenerated at 110ºC to 120ºC[23]

Capture-ready steam systems seek to have initial costs and performance close to industry standard units, but be able to supply steam for solvent regeneration with a combination of good thermodynamic integration, low cost and minimal need for modification.

Three basic capture-ready steam turbine configurations, shown in Figure 7.2, have been proposed:

- ◊ Option A: Throttled LP Turbine

The IP/LP crossover pressure is set at the desired value for solvent regeneration and space is allowed for a valve downstream of the steam off-take. When capture is retrofitted and steam extracted at the IP/LP crossover, the LP inlet is throttled (using the valve) to keep the crossover pressure constant. Whilst this method incurs throttling losses, any steam extraction flow can be accommodated, the losses are reduced if the steam requirements are lowered by improved solvents, and the system can be operated at full power without capture if required.

- ◊ Option B: Floating Pressure LP Turbine

In this configuration the initial IP/LP crossover pressure is chosen so that, when the predicted amount of steam is extracted for solvent regeneration, it falls to the required value. The IP cylinder must be capable of accommodating the reduced exit pressure and increased stage loadings with capture, i.e. axial thrust changes for single flow units, increased blade bending moments and possibly flow restrictions. This may be done by suitably designing the IP turbine from the start, particularly the latter stages, so that the capture conditions can be sustained without any changes, thus avoiding the need to open up the cylinder and make any modifications. This, however, would result in a mismatch between the turbine and its cycle conditions after the capture plant has been installed, leading to a performance penalty. Alternatively, the IP turbine can be modified as part of the retrofit to better match its

[23] For further work on this topic see Lucquiaud, Gibbins and Lord, *Carbon Dioxide Capture-Ready Steam Turbine Options For Post-Combustion Capture Systems Using Aqueous Solvents*, submitted for the proceedings of IMECE2007 ASME International Mechanical Engineering Congress and Exposition, to be held November 11-15, 2007, Seattle, Washington, USA.

new operating conditions. In both cases a very slight loss in initial IP cylinder efficiency is possible, although this is likely to be within normal design variations. Slightly increased costs will also be incurred, but again these are expected to be so low as to be lost in the 'noise' once initial design methods have been developed.

As with the clutched LP design (Option C) the best performance will be obtained if the extraction steam flow with capture is specified correctly or the LP turbine capacity can be easily modified but, unlike the clutched LP, both higher and lower steam extraction flows can be accommodated if valves are used downstream of the IP/LP cross-over extraction point and in the extraction line respectively. Further matching to the actual capture steam flow could also be accomplished by appropriate design of any stages added to the IP turbine, or possibly by re-blading the IP turbine. Higher levels of superheat in the extracted steam at reduced extraction flows might advantageously be used for feedwater heating[24] instead of spray de-superheating with reboiler condensate.

◊ Option C: Clutched LP Turbine

The IP/LP crossover pressure is set at the desired value for solvent regeneration, typically 3 to 4 bar, assumed to be 3.6 bar[25] in this study for comparison purposes, and space (flanges and a spool piece) is provided for a suitably-sized steam off take to be connected. The LP turbine cylinders are sized so that when one is taken out of service the steam flow no longer required exactly matches the requirements for solvent regeneration. The unwanted LP turbine rotor could be removed and replaced with a lay-shaft or a clutch could be used, possibly with the generator placed between the LP turbine cylinders.

These arrangements give the highest possible efficiency with capture, but only if different-sized LP cylinders are acceptable and if the regeneration steam flow has been predicted accurately (unless exactly 66%, 50% or 33% flow is required). In practice this is unlikely to be the case, however, since even if thermally-regenerated solvent systems are the preferred retrofit capture options at some time in the future the heat requirements are likely to be reduced below those for current systems by some unpredictable amount. At one extreme, if steam requirements are very low, it may be impossible to pass steam through the remaining LP turbine(s) if a cylinder is taken out of service and the system will have to be operated as the throttled LP system described in Option A. A clutch system will also add additional up-front costs with no immediate benefit, although provision to install a lay-shaft is likely to require minimal upfront costs. Particularly in systems with three LP cylinders, which can accommodate steam extraction rates of 33%, or somewhat higher with modest throttling, this option may therefore be attractive[26].

Note that these options could be used in combination (e.g. a floating pressure LP turbine which is throttled to achieve a range of operating conditions).

◊ Option D: Back-Pressure Turbine

Although not a capture-ready option itself, it is possible that plant developers will consider adding a back-pressure unit to a power plant site when capture is retrofitted through provision of a new boiler. Such a unit would help to compensate for the capture energy penalty, by supplying some of the steam required for solvent regeneration and generating additional electricity. Capital costs would be reduced

[24] Gibbins, J. and Crane, R 2004a, *Scope for reductions in the cost of CO_2 capture using flue gas scrubbing with amine solvents* Proc. I.Mech.E, Vol. 218, Part A, J. Power and Energy (2004), 231-239.
[25] *Improvement in Power Generation with Post Combustion Capture of CO_2:* IEA GHG R & D Programme Report No. PH4/33, November 2004
[26] Gibbins, J.R., Crane, R.I., Lambropoulos, D., Man, C. and Zhang, J 2004b, *Making pulverised coal plant 'capture ready': methods and benefits*, 7th International IEA GHG CO_2 Capture Network Workshop, Vancouver, 10 September 2004 (IEA GHG Report PH4/34).

because of the lack of LP cylinders, the smaller alternator (effectively existing alternators would be better-used) and more efficient steam extraction, both from the back pressure unit and, if appropriately designed, from the pre-existing units which would be operating closer to their initial design points. Pre-existing units in the plant would probably still need to be made capture-ready, but the anticipated maximum extraction steam flow might be reduced.

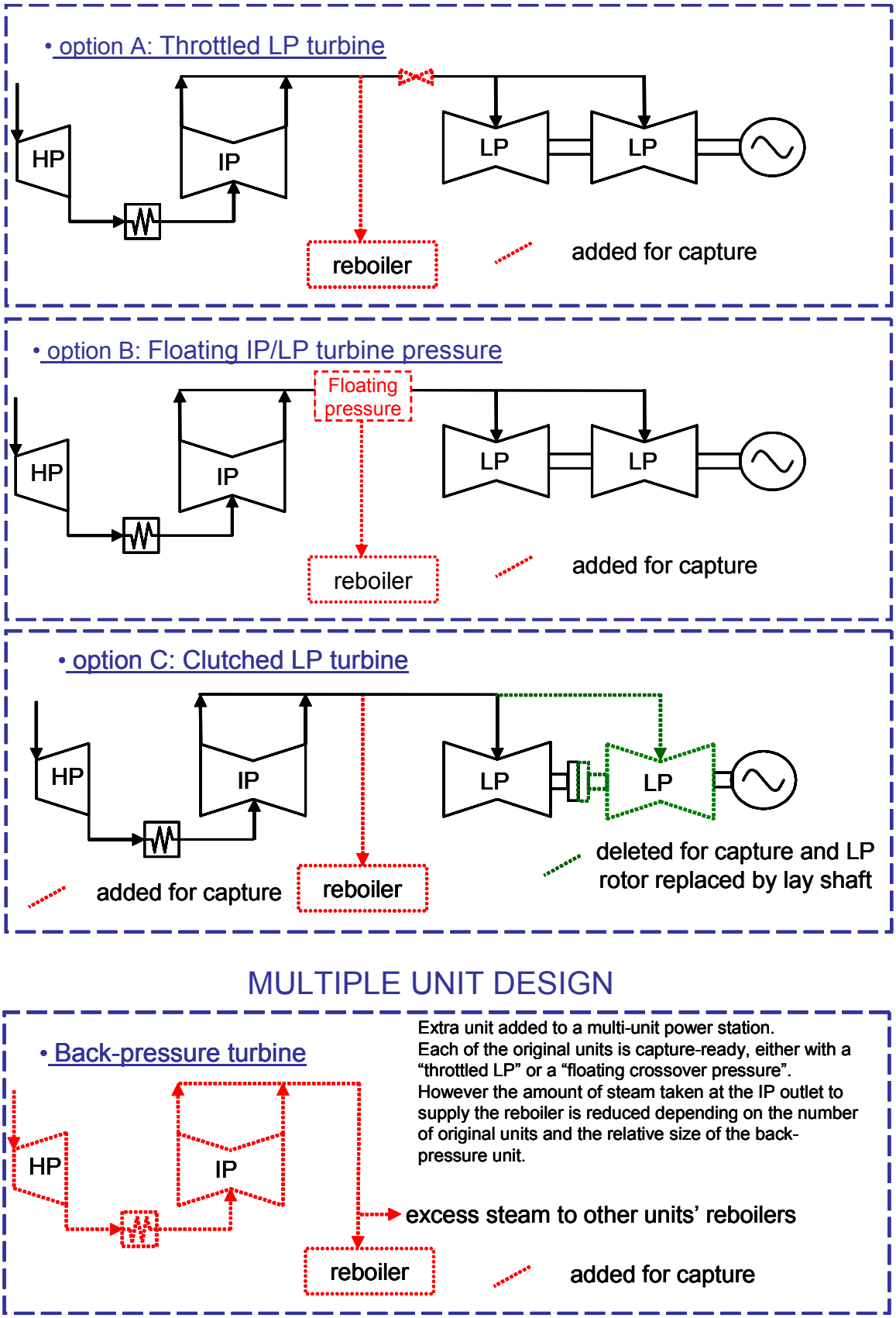

Figure 7.2: Possible Steam Turbine Options for Capture-Ready PF Power Plants; Capture Technology – Post Combustion Amine Scrubbing

Performance Modelling Approach

In order to estimate the relative performances for capture options A, B and C on a consistent basis, an idealised turbine system has been used that can be adapted to represent all of the initial configurations. This idealised case can be thought of as a HP cylinder, an IP cylinder, the LP cylinder and an additional set of stages that can be located in either the IP cylinder or the LP cylinder. Thus either the inlet or the outlet pressure of the additional stages will set the IP/LP crossover pressure. This approach allows turbine isentropic efficiencies, the extraction steam flows for boiler regenerative feed water heating and the boiler input to the steam cycle to be kept constant regardless of the capture-ready option. Other system characteristics, including extraction steam flows to meet re-boiler heat requirements as a function of system heat input (i.e. coal firing rate), are based on IEA GHG study PH4/33.

When capture-ready power plants are retrofitted with capture, the lower steam flow rate will reduce the cooling duty requirements for the steam cycle in the condenser. The condenser pressure will drop and extra cooling capacity (e.g. from seawater cooling) will be available. On the other hand, the total heating load for the plant will increase since the overall plant efficiency will decrease and more heat will have to be rejected for solvent cooling and CO_2 compressor intercooling. In cases with constant cooling tower capacity, this will result in an increase of the condenser pressure. For the purposes of this comparison a constant condenser pressure has therefore been assumed.

Results and Discussion

Steam cycle efficiencies for capture-ready turbine options before and after capture for the three capture ready options A, B and C are shown in Table 7.1. Also shown for comparison is Option U, capture retrofit for a plant without any capture-ready features, to the same base case as the floating LP (Option B), in which the LP pressure is maintained by throttling in the IP/LP crossover and the required steam pressure to the solvent re-boiler by throttling in the extraction line. It should be noted that option U is one capture-unready configuration based on a similar capture-ready case to option A, B and C. Other capture-unready configurations would give different results.

As would be expected, the clutched LP (Option C) in which the turbine and steam flows are still exactly matched gives the best performance. The initially-similar Option A, which has an oversized LP turbine with capture, suffers a higher penalty due to the throttling losses required to reduce the LP steam flow. The floating pressure LP (Option B) achieves intermediate performance; it has no throttling losses (in the ideal case, when designed for the exact steam extraction rate) but the higher IP stage loadings give reduced overall IP cylinder efficiency even if the stage performances are not significantly reduced at the changed operating conditions. Options A and B also suffer from increased LP exit losses due to the last stages being oversized for the reduced steam flow.

Steam Turbine Assessment Summary

Capture-ready steam turbine designs can be implemented with little or no performance or cost penalty and could permit significant improvements in performance after capture retrofit. A range of options are available, which could be used in combination.

The most efficient option, Option C, in which an LP turbine cylinder is taken out of service after the capture retrofit, requires the extraction flow to match the turbine capacity for the best results. A clutched version is probably too expensive to be

considered unless capture is to be retrofitted within a few years or less, but provision to replace an LP rotor with a layshaft could be cheap and advantageous, particularly in units with 3x33% LP cylinders.

Setting the IP/LP crossover pressure to the anticipated pressure required for solvent regeneration (3.6 bara) and throttling to reduce the steam flow to the LP cylinder with capture (Option A) gives approximately one percentage point penalty compared to Option C. For steam turbine without any specific capture-ready feature (Option U) having higher IP/LP crossover pressures this penalty rises, to 2.5 percentage points at 6.6 bara compared to Option C, due to greater throttling losses to the LP turbine and also in the extraction line.

If the IP/LP crossover pressure is initially set to a higher value but allowed to 'float' down as steam is extracted (Option B) then the best performance, for exact matching to the extracted steam flow, the steam cycle efficiency is 0.5 percentage points worse than the ideal capture case (Option C). Building the IP cylinder to allow operation under the changed conditions is expected to add minimal cost. Additional expenditure at the time capture is added, to modify the turbine to match revised cycle conditions, could bring the performance close to the ideal case.

Both throttled (Option A) and floating pressure (Option B) options would allow operators to benefit from better solvents with reduced steam extraction requirements. The floating pressure option (Option B) would also allow the use of solvents that needed higher regeneration temperatures, and hence higher extraction pressures, at reduced steam extraction rates. The extracted steam might be passed through a de-superheating feedwater heater to recover higher levels of superheat under these conditions.

A full discussion of the implications of solvent developments on capture-ready steam turbine configuration is presented in Lucquiaud 2007[27].

Table 7.1 Comparison of Cycle Efficiencies for capture-ready Turbine Options

	Base case 1 (for U & C)	Base case 2 (for A & B)	**U** Capture-unready retrofit	**A** Throttled LP turbine retrofit	**B** Floating pressure LP turbine retroft	**C** Clutched LP retrofit
Work output (MWe)	944	944	801	828	838	845
Boiler input (MWth)	1803	1803	1803	1803	1803	1803
Heat rejection to condenser (MW)	938	938	627	502	587	584
IP/LP crossover pressure before retrofit (bar)	6.6	3.6	6.6	3.6	6.6	3.6
IP exit pressure with steam extraction (bar)			6.6	3.6	3.6	3.6
LP inlet pressure with steam extraction (bar)			4.0	2.1	3.6	3.6
Heat input to reboiler (MW)			490	490	490	490
Heat recovery from capture plant (MW)			96	96	95	96
Net turbine heat rate (kJ/kWhr)	6856	6856	8084	7865	7760	7701
Steam cycle Rankine efficiency (%)	52.4	52.4	44.4	45.9	46.4	46.9
Steam cycle Rankine efficiency penalty (%)			8.0	6.5	5.9	5.5

[27] Lucquiaud, Gibbins and Lord, *Carbon Dioxide Capture-Ready Steam Turbine Options For Post-Combustion Capture Systems Using Aqueous Solvents*, submitted for the proceedings of IMECE2007 ASME International Mechanical Engineering Congress and Exposition, to be held November 11-15, 2007, Seattle, Washington, USA

7.4 Impact on Plant Performance: Conventional vs Capture-Ready PF Power Plants (Capture Technology – Post Combustion Amine Scrubbing)

7.4.1 Introduction

The assessment has been carried out considering the performance data provided in IEA GHG Report No. PH4/33, as a basis and considers the following to assess the impact of providing capture-ready features:-

- ◊ Retrofit for PF Power Plants without any capture-ready features (Case 1, 1A)
- ◊ Retrofit for PF Power Plants with essential capture-ready features (Case 2, 2A)
- ◊ Retrofit for PF Power Plants with capture-ready pre-investments in addition to essential features. It should be noted the pre-investment cases presented (Cases 3, 3A and 4, 4A) consider only pre-investments in the steam turbine generator and FGD plant and not all of the pre-investments discussed in Section 7.3.

7.4.2 Basis

Reference: IEA Report No PH4/33 (November 2004)

The data presented in Table 7.2 are derived from the estimated performance of a 827 MW_e (gross) ASC PF bituminous coal-fired Power Plant with Post Combustion CO_2 capture provided in the above referenced IEA GHG report. Major design considerations are as detailed below:

Plant size	827 MW_e (gross) with CO_2 capture (Case 2 in Table 7.2) (this case is considered as the base case for estimating the performance of other cases)
	944 MW_e (gross) for plant without CO_2 capture arrived at considering same fuel heat input (i.e. 1913 MW_{th})
Site data	
Location	Coastal
Ambient air temperature	9°C
Atmospheric pressure	1.013 bar
Fuel	Australian bituminous coal, LHV = 25870 kJ/kg (IEA GHG's standard design coal)
Boiler	Advanced SuperCritical Pulverised Fuel Boiler
Fuel heat input	1913 MW_{th}
$DeNO_X$ system	Selective Catalytic Reduction
$DeSO_X$ system	Limestone-Gypsum Wet FGD
Steam Turbine	Advanced Supercritical Steam Turbine
Steam parameters	
HP steam	290 bara and 600°C
IP steam	60 bara and 620°C
Condenser pressure	40 millibar a
Condenser cooling	Sea water @ 12°C

Boiler feed water pumps	Electrically driven
CO_2 quality	>95%
CO_2 recovery	about 88%

7.4.3 Case Descriptions and Assumptions

For all cases presented in Table 7.2, the overall 'heat input rate' is kept the same. This basis is considered as an appropriate plant sizing criterion to evaluate the impact of capture-ready features on performance. The gross power output of 944 MW_e (for operation without capture) is based on boiler heat input of 1913 MW_{th} and with conventional PF Power Plant arrangement.

Cases 1, 1A: ASC PF Bituminous Power Plant without any Capture-Ready Features

Case Description

No capture-ready features are considered. Retrofit of this plant with post combustion CO_2 capture is still considered possible. With the normally adopted plant design, the following are considered to be necessary and achievable during capture retrofit:

- Incorporation of FGD polisher and associated duct work
- modifications to the IP/LP cross over pipe for steam extraction and addition of required valves
- incorporation of amine scrubber + auxiliaries
- incorporation of CO_2 compression plant
- process integration with capture equipment
- incorporation of additional electrical equipment (auxiliary transformers, cabling)

It is assumed that the layout and design normally adopted in these plants do not necessarily facilitate the following:

- modifications to steam turbine island equipment

Furthermore, the difficulty of the retrofit (for plants without any capture-ready features) will be dependent upon the plant layout.

Case 1 in Table 7.2 presents the performance of the PF Power Plant prior to capture retrofit and Case 1A presents the performance of the PF Power Plant after capture retrofit.

Gross Power Generation

With 1913 MW_{th} fuel heat input, the power plant is estimated to generate 944 MW_e gross power and 867 MW_e net power, without CO_2 capture.

After capture retrofit the plant is estimated to generate about 801 MW_e gross power and 644 MW_e net power, with CO_2 capture.

As no capture-ready features in the turbine island are considered, this case has the lowest gross power generation after capture retrofit compared to that of all other cases discussed.

Auxiliary Power Consumption

The auxiliary power consumption for Cases 1, 1A presented in Table 72 is arrived at by considering the following:

◊ Operation without capture (Case 1)

Auxiliary power consumption is estimated based on details provided in IEA Report No PH4/33.

◊ Operation with capture (Case 1A)

i. Increase in FGD power consumption on account of the addition of a polishing unit (as the original FGD plant does not have any capture-ready features, a separate FGD polisher requirement is assumed).

ii. Separate booster fan for FGD polisher is considered.

iii. Reduced condensate pump power requirement on account of the reduction in the condensate flow due to LP steam extraction to the amine scrubber plant (power consumption for pumping of condensate from the amine scrubbing plant to the water-steam-condensate cycle is included in amine scrubber power consumption).

iv. No change in cooling water (sea water) pumps power consumption, as the increase in auxiliary cooling load is partly offset by the reduction in the cooling load of the main turbine condenser and partly by assuming slightly higher cooling water (sea water) discharge temperature (to maintain same plant cooling water mass flow rate before and after capture retrofit). Also assumes sea water is used to meet the cooling water requirements of the capture equipment.

v. BoP equipment power consumption (additional water treatment plant, waste water treatment plant requirements).

vi. Capture equipment power consumption as indicated in IEA Report No PH4/33.

Case 2, 2A: ASC PF Bituminous Power Plant with Capture-Ready Features (essential requirements along with a throttled LP turbine)

Case Description

The case considers essential capture-ready features and the following (the pre-investment required for these additions have been found to be negligible).

◊ Throttled LP turbine retrofit as described in Option A in Section 7.3.20.

◊ The FGD plant is designed to meet amine scrubber SO_2 limits, but will operate to achieve LCPD SO_X emission limits of 200 mg/Nm^3 @ 6% O_2 v/v, whilst operating without capture.

Case 2 in Table 2 presents the performance of the PF Power Plant prior to capture retrofit and Case 2A presents the performance of the PF Power Plant after capture retrofit.

Gross Power Generation

With 1913 MW_{th} fuel heat input, the power plant is estimated to generate 944 MW_e gross power and 867 MW_e net power, without CO_2 capture.

After capture retrofit the plant is estimated to generate about 827 MW_e gross power and 669 MW_e net power, with CO_2 capture.

With a throttled LP turbine retrofit, around 3% higher gross power generation (explained in Section 7.3.20 and Table 1) with CO_2 capture is possible compared to that of Case 1A.

Auxiliary Power Consumption

The auxiliary power consumption for Cases 2, 2A presented in Table 7.2 is arrived at by considering the following:

◊ Operation without capture (Case 2)

Auxiliary power consumption is estimated based on details provided in IEA Report No PH4/33.

◊ Operation with capture (Case 2A)

Same as Case 1A except for the following:

As the FGD plant is designed to meet future limits also, no separate FGD polisher or booster fan is required. FGD will be operating to meet the LCPD SO_X emission limits of 200 mg/Nm^3 @ 6% O_2 v/v SO_X levels whilst operating without capture. As the additional power consumption is expected to be minimal whilst operating the FGD plant to meet lower SO_2 levels (as required by amine scrubbing plant), the same is not accounted for.

Case 3, 3A: ASC PF Bituminous Power Plant with Capture-Ready Features (essential requirements along with a floating pressure LP turbine)

Case Description

The case considers essential capture-ready features and the following pre-investment options:

◊ The steam turbine, in particular the IP/LP turbine sections, is designed so that capture conditions can be sustained without any modifications (i.e. a floating pressure LP turbine as described in 'Option B' in Section 7.3.20.

◊ The FGD plant is designed to meet amine scrubber SO_2 limits, but will operate to achieve LCPD SO_X emission limits of 200 mg/Nm^3 @ 6% O_2 v/v, whilst operating without capture.

Case 3 in Table 7.2 presents the performance of the PF Power Plant prior to capture retrofit and Case 3A presents the performance of the PF Power Plant after capture retrofit.

Gross Power Generation

With 1913 MW_{th} fuel heat input, the power plant is estimated to generate 944 MW_e gross power and 867 MW_e net power, without CO_2 capture.

After capture retrofit the plant is estimated to generate about 838 MW_e gross power and 680 MW_e net power, with CO_2 capture.

With a floating pressure LP turbine design, around 4.5% higher gross power generation (explained in Section 7.3.20 and Table 7.1) with CO_2 capture is possible compared to that of Case 1A.

Auxiliary Power Consumption

The auxiliary power consumption for Cases 3, 3A presented in Table 7.2 is arrived at by considering the following:

◊ Operation without capture (Case 3)

Auxiliary power consumption is estimated based on details provided in IEA Report No PH4/33.

◊ Operation with capture (Case 3A)

Same as Case 2A

Case 4, 4A: ASC PF Bituminous Power Plant with Capture-Ready Features (essential requirements along with a clutched LP turbine)

Case Description

The case considers essential capture-ready features and the following pre-investment options:

◊ The IP/LP turbine cross over pressure is set considering capture requirements. The LP turbines are designed to enable removal (declutching) of one section to get optimum performance with capture (clutched LP turbine as briefed in 'Option C' in Section 7.3.20)

◊ The FGD plant is designed to meet amine scrubber SO_2 limits, but will operate to achieve LCPD SO_X emission limits of 200 mg/Nm^3 @ 6% O_2 v/v, whilst operating without capture.

Case 4 in Table 7.2 presents the performance of the PF Power Plant prior to capture retrofit and Case 4A presents the performance of the PF Power Plant after capture retrofit.

Gross Power Generation

With 1913 MW_{th} fuel heat input, the power plant is estimated to generate 944 MW_e gross power and 867 MW_e net power, without CO_2 capture.

After capture retrofit the plant is estimated to generate about 845 MW_e gross power and 687 MW_e net power, with CO_2 capture.

With a clutched LP turbine design, around 5.5% higher gross power generation (explained in Section 7.3.20 and Table 7.1) with CO_2 capture is possible compared to that of Case 1A.

Auxiliary Power Consumption

The auxiliary power consumption for Cases 4, 4A presented in Table 7.2 is arrived at by considering the following:

◊ Operation without capture (Case 4)

Auxiliary power consumption is estimated based on details provided in IEA Report No PH4/33.

◊ Operation with capture (Case 4A)

Same as Case 2A.

Note (all cases): If the design condenser duty is fully utilized after capture retrofit, it will be possible to operate the steam turbine at lower exhaust pressure and generate more power; provided the LP turbine sections are designed/ modified to handle lower exhaust pressures. However, for study purposes, a constant condenser pressure before and after capture retrofit has been assumed.

7.4.4 Equipment List: Conventional vs Capture-Ready PF Bituminous Power Plants

Table 7.3 presents the Equipment List for the various capture-ready cases discussed in Section 7.4, in comparison to a conventional PF Power Plant without any capture-ready features.

Table 7.4 presents the additional equipment required for capture retrofit for the cases discussed (Cases 1A, 2A, 3A and 4A)

7.4.5 Capital and Operating Expenses: Conventional vs Capture-Ready PF Bituminous Power Plants

Estimates of Capital and Operating Expenses (CAPEX & OPEX) for Post Combustion Capture-ready PF Plants are derived from the CAPEX & OPEX data provided in IEA Report No PH4/33. As the IEA report cost data is based on a 2003 basis, a 25% escalation is considered for CAPEX and a 15% escalation has been considered for the labour part of the OPEX for arriving at year 2006 costs.

Tables 7.5 and 7.6 present the CAPEX and OPEX respectively of the different Post Combustion Amine Scrubbing based capture-ready PF cases discussed in Section 7.4.

7.4.6 Summary of Results

A summary of the impact on plant performance after capture retrofit for the cases investigated is presented below:

	Case 1A	Case 2A	Case 3A	Case 4A
Fuel heat input, MW_{th}	1913	1913	1913	1913
Gross power output, MW_e	801	827	838	845
Net power output, MW_e	643	669	680	687
Net plant efficiency, % LHV	33.6	35.0	35.5	35.9
CO_2 capture penalty, %age points (compared to air-fired PF power plant efficiency of 45.3% LHV; Case 1)	11.7	10.3	9.7	9.4

The results conclude that capture-ready pre-investments such as those considered of floating pressure LP turbine or clutched LP turbine reduce the CO_2 capture penalty by about 1.4 to 2.5 percentage points (penalty expressed as net plant efficiency) compared to that of non-capture-ready PF power plants retrofitted with CO_2 capture. These capture-ready pre investments can be made if a clear economic benefit can be shown through life cycle analysis. For examples of such analyses, see Section 11, below.

Table 7.2: Impact on Performance – CO_2 Capture-Ready vs Non-Capture-Ready PF Power Plants; Capture Technology – Post Combustion Amine Scrubbing

		Estimated Performance 'before' **CO_2 Capture Addition**				**Estimated Performance** 'after' **CO_2 Capture Addition**			
		Case 1 **Non-Capture-Ready ASCPF PF Power Plant** (conventional PF power plant)	**Case 2** **ASCPF Power Plant** *with* *'essential'* **capture-ready features &** *throttled LP turbine*	**Case 3** **ASCPF Power Plant** *with* *'essential'* **capture-ready features &** *floating pressure LP turbine*	**Case 4** **ASCPF Power Plant** *with* *essential* **capture-ready features &** *clutched LP turbine*	**Case 1A** Case 1 operation *with* CO_2 capture	**Case 2A** Case 2 operation *with* CO_2 capture (throttled LP turbine)	**Case 3A** Case 3 operation *with* CO_2 capture (floating pressure LP turbine)	**Case 4A** Case 4 operation *with* CO_2 capture (clutched LP turbine)
Gross Power Generation	*MW_e*	*944*	*944*	*944*	*944*	801	827	838	845
Fuel Input	kg/s	73.96	73.96	73.96	73.96	73.96	73.96	73.96	73.96
Fuel Heating Value (LHV)	MJ/kg	25.86	25.86	25.86	25.86	25.86	25.86	25.86	25.86
Fuel Heat Input	MW_{th}	1913	1913	1913	1913	1913	1913	1913	1913
Condenser pressure	mbara	40	40	40	40	40	40	40	40
Auxiliary Power Consumption									
Mills	MW_e	2.7	2.7	2.7	2.7	2.7	2.7	2.7	2.7
Forced Draught Fans (Secondary FGR Fans)	MW_e	3.1	3.1	3.1	3.1	3.1	3.1	3.1	3.1
Induced Draught Fans	MW_e	4.0	4.0	4.0	4.0	4.0	4.0	4.0	4.0
Primary Air Fans (Primary FGR Fans)	MW_e	1.9	1.9	1.9	1.9	1.9	1.9	1.9	1.9
Booster (ID) Fans (for $DeSO_X$ Unit)	MW_e	-	-	-	-	Included with $DeSO_X$ Unit	-	-	-
$DeNO_X$ Unit (SCR)	MW_e	0.4	0.4	0.4	0.4	0.4	0.4	0.4	0.4
Emission Control (ESP)	MW_e	2.5	2.5	2.5	2.5	2.5	2.5	2.5	2.5
$DeSO_X$ Unit (wet FGD)	MW_e	8.5	8.5	8.5	8.5	11.0	11.0	11.0	11.0
Coal & Ash Handling	MW_e	2.2	2.2	2.2	2.2	2.2	2.2	2.2	2.2
Boiler Feed Pumps	MW_e	33.0	33.0	33.0	33.0	33.0	33.0	33.0	33.0

Table 7.2 (continued): Impact on Performance – CO_2 Capture-Ready vs Non-Capture-Ready PF Power Plants; Capture Technology – Post Combustion Amine Scrubbing

		Estimated Performance 'before' CO_2 Capture Addition				Estimated Performance 'after' CO_2 Capture Addition			
		Case 1 **Non-Capture-Ready ASCPF PF Power Plant** (conventional PF power plant)	**Case 2** **ASCPF Power Plant** *with* '*essential*' **capture-ready features &** *throttled LP turbine*	**Case 3** **ASCPF Power Plant** *with* '*essential*' **capture-ready features &** *floating pressure LP turbine*	**Case 4** **ASCPF Power Plant** *with essential* **capture-ready features &** *clutched LP turbine*	**Case 1A** Case 1 operation *with* CO_2 capture	**Case 2A** Case 2 operation *with* CO_2 capture (throttled LP turbine)	**Case 3A** Case 3 operation *with* CO_2 capture (floating pressure LP turbine)	**Case 4A** Case 4 operation *with* CO_2 capture (clutched LP turbine)
Condensate Pumps	MW_e	1.9	1.9	1.9	1.9	1.4	1.3	1.3	1.3
Main Cooling Water & Auxiliary Cooling Water System	MW_e	7.1	7.1	7.1	7.1	7.1	7.1	7.1	7.1
Steam Turbine Auxiliaries (lube oil system, etc.)	MW_e	0.7	0.7	0.7	0.8	0.7	0.7	0.7	0.6
Transformer losses, excitation losses and cable losses	MW_e	3.8	3.8	3.8	3.8	3.5	3.6	3.6	3.7
Others (plant make-up water system, water treatment plant, waste water disposal system, HVAC, C&I etc.)	MW_e	5.5	5.5	5.5	5.5	7.2	7.2	7.2	7.2
Amine Scrubber + other auxiliaries	MW_e	-	-	-	-	17.0	17.0	17.0	17.0
CO_2 Compression Plant	MW_e	-	-	-	-	60.0	60.0	60.0	60.0
Total auxiliary power	MW_e	77.3	77.3	77.3	77.4	157.7	157.7	157.7	157.7
% of gross output	%	8.2	8.2	8.2	8.2	19.7	19.1	18.8	18.7
Net power	MW_e	866.7	866.7	866.7	866.6	643.3	669.3	680.3	687.3
Gross efficiency of Plant	%, LHV	49.3	49.3	49.3	49.3	41.9	43.2	43.8	44.2
Net Plant Efficiency	%, LHV	45.3	45.3	45.3	45.3	33.6	35.0	35.6	35.9
CO_2 capture penalty	%age points	-	-	-	-	11.7	10.3	9.7	9.4
CO_2 emissions	g/kWh(net)	727	727	727	727	122	117	115	114

Table 7.3 : Equipment List – Prior to CO_2 Capture Retrofit; Capture Technology – Post Combustion Amine Scrubbing

UNIT / SYSTEM	Case 1 **Non-Capture-Ready ASCPF Air Fired Power Plant** (conventional plant)	Case 2 **ASCPF Air Fired Power Plant** *with* '*essential*' **capture-ready features (throttled LP turbine)**	Case 3 **ASCPF Air Fired Power Plant** *with* **capture-ready** '*pre-investments*' **(floating pressure LP turbine)**	Case 4 **ASCPF Air Fired Power Plant** *with* **capture-ready** '*pre-investments*' *(clutched LP turbine)*
Unit 100 Coal and Ash Handling	Coal delivery equipment Bunkers Yard equipment Transfer towers Dust suppression equipment Ventilation equipment Belt feeders Metal detection system Belt weighing equipment Bottom ash conveying system Fly ash conveying system	Same as Case 1	Same as Case 1	Same as Case 1
Unit 200 Advanced Supercritical Boiler Island & Particulate Emission Control	Furnace Superheater Reheater Economiser Regenerative airheaters Boiler integral pipe work Forced draught fans Primary air fans Induced draught fans Air and flue gas duct work Structures and platforms Circulation pumps Coal feeders Chemical dosing equipment Boiler drains system Electrostatic precipitator	Same as Case 1, with the following: Provisions in ID fan discharge ducting to ease interconnections with Amine scrubber	Same as Case 1, with the following: Provisions in ID fan discharge ducting to ease interconnections with Amine scrubber.	Same as Case 1, with the following: Provisions in ID fan discharge ducting to ease interconnections with Amine scrubber.
Unit 300 Flue Gas Desulphurisation & Handling Unit	Limestone storage and feeding system Spray tower absorber Reaction tank Recirculation pumps/ wash pumps Mist eliminators Slurry recycling/ handling system Gypsum handling system	Same as Case 1, but with FGD plant designed to cater for future requirements also.	Same as Case 1, but with FGD plant designed to cater for future requirements also.	Same as Case 1, but with FGD plant designed to cater for future requirements also.

Table 7.3 (continued) : Equipment List – Prior to CO_2 Capture Retrofit; Capture Technology – Post Combustion Amine Scrubbing

UNIT / SYSTEM	**Case 1** **Non-Capture-Ready ASCPF Air Fired Power Plant** (conventional plant)	**Case 2** **ASCPF Air Fired Power Plant** *with* **'*essential*' capture-ready features (throttled LP turbine)**	**Case 3** **ASCPF Air Fired Power Plant** *with* **capture-ready '*pre-investments*' (floating pressure LP turbine)**	**Case 4** **ASCPF Air Fired Power Plant** *with* **capture-ready '*pre-investments*'** *(clutched LP turbine)*
Unit 400 DeNOx Unit (SCR)	Reactor casing Catalyst Ammonia injection equipment Ammonia storage, handling system	Same as Case 1	Same as Case 1	Same as Case 1
Unit 500 Advanced Supercritical Steam Turbine Island	HP, IP & LP Turbines Turbine generator Generator transformer Lube oil system Steam surface condenser Condensate pumps LP feed water heaters Deaerator Boiler feed pumps (electrical) HP feed water heaters Turbine island integral pipe work	Same as Case 1, with the following: ○ Provisions in cross over pipe to incorporate valve(s) & extraction steam piping to reboiler. ○ Provisions in piping to ease interconnections while capture retrofit (example: additional length piping to accommodate interconnections for integration & heat recovery from Amine plant/ CO_2 compression plant). ○ Turbine building design to consider routing of very large diameter piping.	IP/LP turbine designed to suit CO_2 capture requirements. Other equipment same as Case-2	LP turbines design to enable removal or declutching of one of the LP turbines while capture retrofit. Other equipment same as Case-2
Unit 800 Balance of Plant Equipment & Electrical	Cooling water pumps Plant make-up water system Raw water treatment plant Demineralisation/ Desalination Plant Waste water treatment plant Chemical dosing system Fire detection/protection system Storage tanks Compressed air system BoP piping Auxiliary transformers Bus ducts and cables Cable trays HV & LV switch gears Control panels Plant lighting Plant control system	Same as Case 1	Same as Case 1	Same as Case 1

Table 7.4: List of additional equipment required for CO_2 Capture Retrofit; Capture Technology – Post Combustion Amine Scrubbing

UNIT / SYSTEM	Case 1A **Non-Capture-Ready ASCPF Air Fired Power Plant** (conventional plant)	Case 2A **ASCPF Air Fired Power Plant** *with* **'*essential*' capture-ready features** (throttled LP turbine)	Case 3A **ASCPF Air Fired Power Plant** *with* **capture-ready '*pre-investments*'** (floating pressure LP turbine)	Case 4A **ASCPF Air Fired Power Plant** *with* **capture-ready '*pre-investments*'** (clutched LP turbine)
Unit 100 Coal and Ash Handling	No additional equipment.	No additional equipment.	No additional equipment.	No additional equipment.
Unit 200 ASC PF Boiler Island	No additional equipment.	No additional equipment.	No additional equipment.	No additional equipment.
Unit 300 Flue Gas Desulphurisation & Handling Unit	Additional Polishing Unit with required pump(s), booster fan(s).	No additional equipment (FGD Plant designed to meet future requirements)	No additional equipment (FGD Plant designed to meet future requirements)	No additional equipment (FGD Plant designed to meet future requirements)
Unit 400 DeNOx Unit (SCR)	No changes to Case 1	No changes to Case 2	No changes to Case 3	No changes to Case 4
Unit 500 Advanced Supercritical Steam Turbine Island	○ Additional pipe work between IP/LP turbine to accommodate valve ○ Valve in cross over pipe	Valve in cross over pipe	No additional equipment.	No additional equipment.
Unit 600 Amine Scrubber	Direct contact coolers & Pumps Amine pumps Absorption towers Storage tanks Reboilers Heat exchangers Stripper Dosing equipment Filters Flue gas blowers	Same as Case 1A	Same as Case 1A	Same as Case 1A
Unit 700 CO_2 Compression Plant	Compressors Heat exchangers Driers Integral pipe work CO_2 pumps	Same as Case 1A	Same as Case 1A	Same as Case 1A
Unit 800 Balance of Plant Equipment & Electrical	Additional auxiliary cooling water pumps Additional waste water treatment unit Additional BoP pipe work Additional Unit auxiliary transformer Additional switch gears & panels Additional control system modules Additional bus duct and cables	Additional auxiliary cooling water pumps Additional waste water treatment unit Additional BoP pipe work Additional Unit auxiliary transformer Additional switch gears & panels Additional control system modules Additional bus ducts and cables	Additional auxiliary cooling water pumps Additional waste water treatment unit Additional BoP pipe work Additional Unit auxiliary transformer Additional switch gears & panels Additional control system modules Additional bus ducts and cables	Additional auxiliary cooling water pumps Additional waste water treatment unit Additional BoP pipe work Additional Unit auxiliary transformer Additional switch gears & panels Additional control system modules Additional bus ducts and cables

Table 7.5: Capital Cost–CO_2 Capture-Ready vs Non-Capture-Ready PF Power Plants; Capture Technology – Post Combustion Amine Scrubbing

	Investment cost: 944 MW_e Capture-Ready plant Capture Technology: Post Combustion Amine Scrubbing (million €)				Additional cost for Post Combustion CO_2 Capture Retrofit (million €)			
	Case 1	**Case 2**	**Case 3**	**Case 4**	**Case 1A**	**Case 2A**	**Case 3A**	**Case 4A**
	Non-Capture-Ready	Capture-ready Essential	Capture-ready designed for floating pressure operation after retrofit	Capture-ready clutched LPT	Non-Capture-Ready	Capture-ready essential (throttled LPT)	Capture-ready floating pressure LPT	Capture-ready one LPT removed
Power generation, MWe (gross)	*944*	*944*	*944*	*944*	*801*	*827*	*838*	*845*
Power generation, MWe (net)	*866.7*	*866.7*	*866.7*	*866.6*	*643.3*	*669.3*	*680.3*	*687.3*
Heat input, MWth	*1913*	*1913*	*1913*	*1913*	*1913*	*1913*	*1913*	*1913*
Condenser operating pressure, mbar a	*40*	*40*	*40*	*40*	*40*	*40*	*40*	*40*
Unit 100, Coal Handling System	66	66	66	66	0	0	0	0
Unit 200, Boiler Island + ESP	293	293	293	293	9	7	7	7
Unit 300, FGD	97	97	97	97	7	0	0	0
Unit 400, DeNOx system	18	18	18	18	0	0	0	0
Unit 500, Steam Turbine Island	160	160	162	180	2	2	2	0
Amine Scrubber + associated equipment	0	0	0	0	105	105	105	105
Unit 700, CO_2 compression/ Inerts removal plant	0	0	0	0	49	49	49	49
Unit 800, BoP Equipment (including steam/ condensate pipework in case of retrofit), Electricals, Civil	210	210	210	210	23	23	23	23
Front end engineering and design of project	0	4	4	4	4	0	0	0
Capture addition cost	n/a	n/a	n/a	n/a	195	186	186	184
TOTAL INSTALLED COST	**844**	**848**	**850**	**868**	**199**	**186**	**186**	**184**
Contingency (@ 10%)	84	85	85	87	20	19	19	18
Owner's cost (@ 5%)	42	42	43	43	10	9	9	9
TOTAL INVESTMENT (2003 cost, see Note 2)	971	975	978	998	229	214	214	212
TOTAL INVESTMENT (2006 cost) (25% increase from 2003 cost)	**1213**	**1219**	**1222**	**1248**	**286**	**267**	**267**	**265**

Notes:
1. The capture-ready PF plant report is based on earlier IEA GHG Report No. PH4/33 [1]
2. 2003 Cost data provided in IEA GHG Report No. PH4/33 [1] is used, as appropriate, for the above estimates. Detailed cost estimation has not been carried out. Exchange rate: 1$=1€
3. The above estimation is based on PF power plant PFD scheme considered in IEA GHG Report No. PH4/33 [1]
4. For case definitions/ design basis, refer to Section 3.4 of this report

Table 7.6: O & M Cost–CO_2 Capture-Ready vs Non-Capture-Ready PF Power Plants; Capture Technology – Post Combustion Amine Scrubbing

	Before CO_2 Capture Retrofit (see Note 2) **O & M cost/ year, million €** **(yearly operating hours = 7446)**				**After CO_2 Capture Retrofit** (see Note 2) **O & M cost/ year, million €** **(yearly operating hours = 7446)**			
	Case-1	**Case-2**	**Case-3**	**Case-4**	**Case-1A**	**Case-2A**	**Case-3A**	**Case-4A**
	Non-Capture-Ready	Capture-ready Essential	Capture-ready Marginally oversized generator/ condensate system	Capture-ready Optimised	Non-Capture-Ready	Capture-ready Essential	Capture-ready Marginally oversized generator	Capture-ready Optimised
Power generation, MWe (gross)	*944*	*944*	*944*	*944*	*801*	*827*	*838*	*845*
Power generation, MWe (net)	*866.7*	*866.7*	*866.7*	*866.6*	*643.3*	*669.3*	*680.3*	*687.3*
Heat input, MWth	*1913*	*1913*	*1913*	*1913*	*1913*	*1913*	*1913*	*1913*
VARIABLE								
Fuel (see note 1)	76.84	76.84	76.84	76.84	76.84	76.84	76.84	76.84
Make up water for FGD and power plant auxialiaries	0.03	0.03	0.03	0.03	0.03	0.03	0.03	0.03
Chemicals and consumables	5.49	5.49	5.49	5.49	17.42	17.42	17.42	17.42
Waste disposal	0	0	0	0	0	0	0	0
Miscellaneous	0.28	0.28	0.28	0.28	0.28	0.28	0.28	0.28
Total variable operating expenses	*82.64*	*82.64*	*82.64*	*82.64*	*94.57*	*94.57*	*94.57*	*94.57*
FIXED								
Direct labor (15% increase considered w.r.t. 2003 cost)	7.13	7.13	7.13	7.13	7.48	7.48	7.48	7.475
Administration (15% increase considered w.r.t. 2003 cost)	2.19	2.19	2.19	2.19	2.30	2.30	2.30	2.3
Maintenance	35.58	35.58	35.58	35.58	37.66	37.66	37.66	37.66
Total fixed operating expenses	*44.90*	*44.90*	*44.90*	*44.90*	*47.44*	*47.44*	*47.44*	*47.44*
Total O & M	**127.54**	**127.54**	**127.54**	**127.54**	**142.00**	**142.00**	**142.00**	**142.00**

Notes:
1. Fuel price = €1.5/GJ and Fuel NCV = 25870 kJ/kg
2. OPEX data provided in IEA GHG Report No. PH4/33 [1] for PF power plant is used.

8. DESIGN REVIEW: PF POWER PLANT WITH OXYFUEL CO_2 CAPTURE-READY FEATURES

8.1 Overview

Pulverised Fuel (PF) Power Plants equipped with Oxyfuel technology offers considerable potential for capture of CO_2. This technology coupled with today's best available Advanced Supercritical (ASC) Boiler (290 bara main steam pressure, 600°C main steam temperature, 620°C reheat steam temperature) and steam turbine significantly minimises the penalty from CO_2 capture compared with that of less efficient plants.

The Oxyfuel combustion technology involves replacement of combustion air with either a stream of near-pure oxygen or a mixture of CO_2 rich flue gas recycle and near-pure oxygen for combustion. The capture-ready PF Power Plant investigations are based on the use of a CO_2 rich flue gas recycle and near pure oxygen mixture. The block flow diagram (Figure 8.1) below presents a typical Oxyfuel PF Power Plant with CO_2 capture. Studies undertaken since the 1990s on capture of CO_2 using Oxyfuel technology in PF Power Plants infer the following:

- ◊ Oxyfuel firing requires approximately two thirds of flue gas recycle to maintain steam conditions and similar boiler performance, to that of air-firing.
- ◊ No major modifications are envisaged to conventional PF boiler pressure parts to introduce Oxyfuel firing with appropriate flue gas recycle.
- ◊ Oxyfuel burners developed from air-fired burner technology, and hence modifications to conventional air-fired burners during Oxyfuel retrofit, are considered feasible.
- ◊ Conventional milling equipment can be used for Oxyfuel firing.
- ◊ The technology is sufficiently well understood to allow the design of the rest of the power plant to be made capture-ready.

The key features that distinguish an Oxyfuel PF Power Plant with CO_2 capture from that of an air-fired PF Power Plant without CO_2 capture are:

- ◊ An Air Separation Unit (ASU) to supply a stream of near pure oxygen into the flue gas recycle for the combustion process.
- ◊ Recirculation of approximately two thirds of the Oxyfuel flue gas back to the boiler plant, providing a primary Oxyfuel flue gas recycle (FGR) stream as the transport medium for the pulverised fuel and secondary Oxyfuel flue gas recycle to the burners and furnace.
- ◊ Incorporation of gas-gas heaters based on conventional air pre-heater technology.
- ◊ Bypass of proprietary De NO_X equipment (SCR/SNCR): The Oxyfuel process is envisaged to inherently deliver significantly reduced NO_X; it is expected that NO_X emissions can be controlled through conventional in-furnace measures [example; low NO_X burners and/or furnace staging as appropriate] to meet the vent stream NO_X emission regulations and CO_2 quality requirements for storage or Enhanced Oil Recovery (EOR) with capture of NO_X in the CO_2 compression and inerts removal plant.
- ◊ Incorporation of a flue gas cooler to cool flue gases to recover low grade heat into the water-steam-condensate cycle, and thus improve overall plant performance.

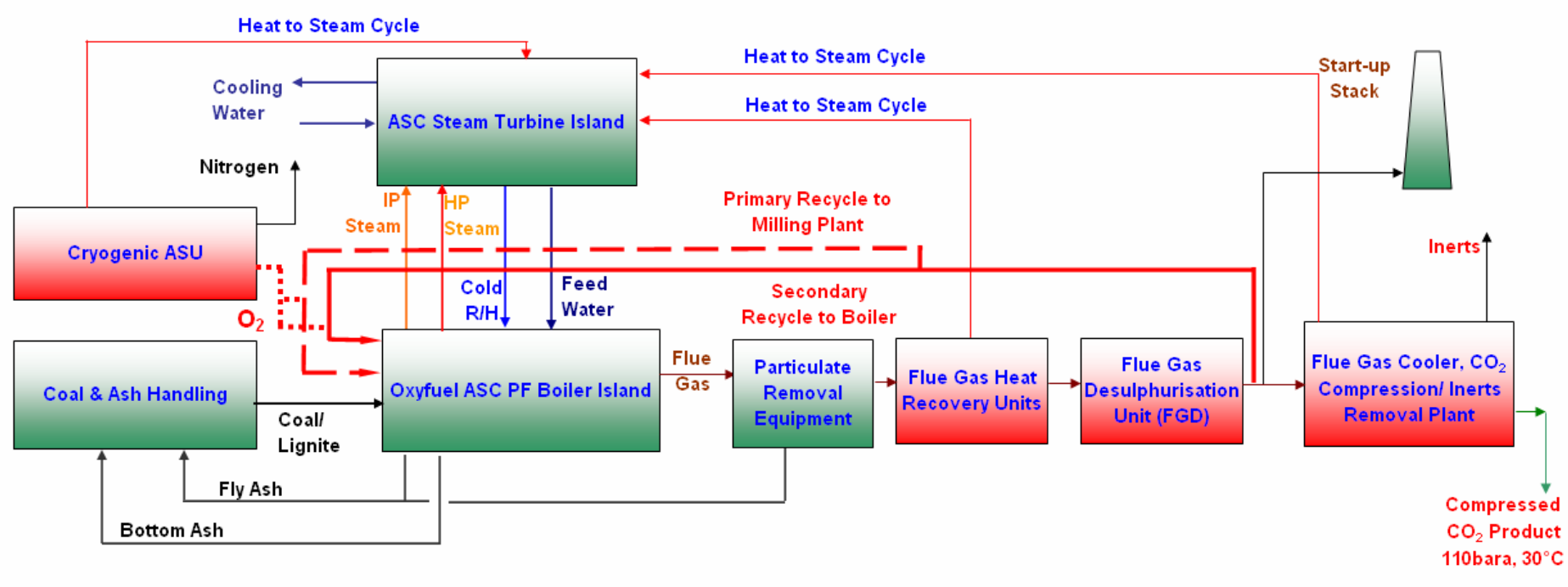

Figure 8.1: Typical Oxyfuel ASC PF (Bituminous) CO_2 Capture Power Plant - Block Flow Diagram

- ◊ Incorporation of a flue gas condenser (e.g. direct contact cooler) for moisture removal and enable use of dry flue gas recycle for fuel transport and drying (Note: the requirement of the flue gas condenser is dependent upon moisture in coal and recycle rate).
- ◊ Incorporation of CO_2 compression and inerts removal plant. Here the cool and dry flue gas is compressed and the inerts are separated before the purified CO_2 product is further compressed to a pressure of about 110 bar for transport via pipelines.

8.2 'Essential' Capture-Ready Requirements: Oxyfuel Technology based CO_2 Capture

The capture-ready requirements discussed in this section are the 'essential' requirements which aim to ease the retrofit of PF Bituminous Power Plants with Oxyfuel technology based CO_2 capture. The capture-ready features discussed require negligible additional investment and also have negligible impact on plant performance whilst operating without capture.

8.2.1 Location

The location of the plant plays a major role in determining its suitability for CO_2 capture as, after capture plant addition, the captured CO_2 needs to be transported for geological storage and/or enhanced oil recovery (EOR). The selection of location should consider the following, in addition to those normally considered for any conventional PF Power Plant without CO_2 capture:

- ◊ Proximity to CO_2 storage and/or other CO_2 user location; this will enable ease of transport and reduction in transportation cost.
- ◊ Proximity to other existing or upcoming power generating stations; this could enable sharing of CO_2 pipelines leading to lower CO_2 transport costs. Furthermore, risks associated with opposition from public for building new plants are generally lower for sites with an established industrial presence.

The 'location feasibility study' should consider the following factors also in addition to the factors that would be normally considered for ASC PF Power Plant without CO_2 capture.

- ◊ CO_2 transport via pipelines to the storage location, including safe transportability and considerations on shared CO_2 pipe lines (or) ship transport for coastal sites.
- ◊ Health and safety issues related to handling of oxygen, CO_2 rich flue gas and CO_2 compression.

8.2.2 Space Requirements

The prime requirement for an ASC PF Power Plant with Oxyfuel capture-ready features is the allocation of sufficient additional space at appropriate locations at site to accommodate the additional CO_2 capture equipment. Further requirement is to allow extension of balance of plant (BoP) equipment to cater for any additional requirements (cooling water, auxiliary power distribution etc.) of the capture equipment. Space will be required for the following:

- ◊ Air Separation Unit.
- ◊ CO_2 compression and inerts removal plant.
- ◊ Heat exchangers for low grade heat recovery.

- ◊ Boiler island additions and modifications (e.g. space for routing flue gas recycle duct).
- ◊ Extension and addition of balance of plant systems to cater for the requirements of the additional equipment (ASU, compression and inerts removal).
- ◊ Space allocation based on hazard and operability (HAZOP) management studies, considering storage and handling of near pure oxygen.

The space requirements are also discussed under individual system/equipment requirements.

It should be noted that studies have been carried out to assess the likely footprint of such a plant. The UK DTI project 407 has carried out such an assessment for both oxy-fuel and amine capture retrofit, but the results are still confidential under the terms of that project,

8.2.3 ASC PF Boiler and Auxiliaries

The Oxyfuel capture-ready ASC PF boiler proper (combustion equipment, furnace, convective heat transfer surfaces) and gas-air heater are essentially the same as any conventional air-fired ASC PF boiler without any Oxyfuel CO_2 capture-ready features. This is discussed below:

- ◊ The Oxyfuel ASC PF boiler design and construction is based on conventional air-fired Advanced Supercritical (ASC) balanced draught boiler technology with conventional low NO_X PF burners and two-stage combustion system. The milling equipment of the Oxyfuel boiler and gas-gas (gas-air) heater are essentially the same as for air-firing. The Oxyfuel PF burners are adopted from air-fired PF burner technology and modifications can be made to the original air-fired burners during capture retrofit.
- ◊ For coal firing, the furnace thermal radiation is dominated by coal quality, soot, char and fly ash particles in the flue gas countering any enhancement of heat transfer capability of Oxyfuel flue gas as a result of increased proportion of radiating gaseous components; namely H_2O and CO_2. The similarities of flame and flue gas emissivities for Oxyfuel PF combustion and air-firing, along with similarity of boiler temperature profiles (based on the appropriate selection of FGR rate), mean that modifications to the boiler's heat transfer surfaces may not be required after Oxyfuel retrofit. Also issues relating to any high temperature corrosion related metal wastage rates are assumed to be no worse than those of conventional air-fired plant with the use of clean Oxyfuel FGR to maintain SO_2 and SO_3 levels similar to air-firing experience with high sulphur coals.
- ◊ The majority of the modifications required for Oxyfuel CO_2 capture will be on the air and flue gas duct and draught plant equipment, to enable combustion of fuel with CO_2 rich flue gas recycle and near pure O_2 mixture instead of air. The capture-ready power plant will need to consider some essential features in the air and flue gas duct and draught equipment to ease Oxyfuel retrofit.

The system and equipment 'essential' requirements for the construction of ASC PF boiler plant as capture-ready plant to utilise Oxyfuel technology for CO_2 capture are briefed below:

- ◊ <u>Combustion Equipment (Milling Plant and PF Burners)</u>: No essential capture-ready requirements are foreseen. Outcome of the investigations and studies

made to date[28] on Oxyfuel combustion indicate that it is unlikely that modifications to the milling plant are required.

Oxyfuel PF burner design can be adapted from air-fired PF burner technology. The modifications, as appropriate, required on the air-fired burners to facilitate Oxyfuel combustion can be carried out during the CO_2 capture retrofit and are not foreseen as an essential capture-ready requirement.

◊ Primary and Secondary Air and Flue Gas System: The primary and secondary combustion air ducts can be modified and re-used to handle primary and secondary flue gas recycle for Oxyfuel combustion operation.

The capture-ready plant duct routing will have to consider possible changes in the system during retrofit to enable ease of modifications and re-use of air ducts as flue gas recycle 'FGR' ducts. The following will be required as a minimum:

i. Adequate space in the boiler island to accommodate the Oxyfuel FGR ducting.

ii. Adequate space to route oxygen supply pipe work and oxygen injection system.

iii. Provisions (sufficient straight length) in boiler flue gas duct work to enable take-off of flue gas recycle duct.

iv. Adequate space to accommodate flue gas condenser (e.g. direct contact cooler), as appropriate, i.e. space to accommodate a flue gas condenser for the total FGR or primary FGR and the flue gas to be.

v. Provisions in FD fan suction air duct work (sufficient straight length) to enable interconnection with new flue gas recycle suction duct, if FD fan is envisaged to be used as FGR fan.

vi. Space for a new FGR fan, if FD fan is not envisaged to be used as an FGR fan.

vii. Provisions for addition of damper(s).

viii. Provisions in the ID fan discharge duct work to accommodate a stack isolation damper and provisions for interconnection with CO_2 compression and inerts removal plant (including accessories).

Other essential requirements in the boiler flue gas system may have to be considered based on the original plant flue gas cleaning equipment selection and the low grade heat recovery envisaged for capture retrofit.

i. Space and provisions to enable interconnections with new flue gas cleaning equipment (refer to Sections 8.2.4, 8.2.5 and 8.2.6 for details).

ii. Space and provisions to enable interconnections with new heat recovery equipment (e.g. flue gas cooler) for recovery of heat in flue gas to the water-steam-condensate system.

iii. Space and provisions to enable interconnections with new heat recovery equipment for recovery of heat in flue gas to the oxygen stream.

---

[28] Sekkappan G, Melling P J, Anheden M, Lindgren G, Kluger F, Molinero I S, Maggauer C and Doukelis A, *Oxyfuel Technology for CO_2 Capture from Advanced Supercritical Pulverised Fuel Power Plants* 8th International Conference on Greenhouse Gas Control Technologies Trondheim, Norway, 19-22 June 2006

◊ Draught plant: Depending on the construction and available design margins, it may be possible to re-use forced draught (FD) fan(s) as main or secondary FGR fan(s), and primary air (PA) fan(s) as primary FGR fan(s) after retrofit with Oxyfuel CO_2 capture. Also, depending on the construction and available design margins, it may be possible to re-use the induced draught (ID) fan(s), provided a booster fan is added to handle the additional pressure drop across the new heat recovery equipment.

To enable the above, the casing and impeller material of all the draught plant will have to be reviewed and if appropriate, made suitable for the Oxyfuel process conditions [higher temperature for some fans or lower temperature (below the acid dew point) for some – based on the FGR scheme envisaged for capture retrofit]. Designing the draught equipment to cater for the future retrofit requirements will give a reduction in the plant outage time required for retrofit. But these requirements are not considered as essential capture-ready requirements and are considered as possible capture-ready pre-investments.

The gas-air heater provided for an Air-fired PF Power Plant can be re-used as a gas-gas heater after the Oxyfuel capture retrofit to heat the flue gas recycle before admission to the combustion equipment. With appropriate flue gas recycle scheme and flue gas cleaning equipment, the original plant air heater can be used without any modifications to cater for this service, provided it continues to operate above the acid dew point. The gas-gas heater cross leakage across the gas-gas heater will have a minor impact on the performance of the downstream CO_2 compression and inerts removal plant. Hence, air heater designs with low cross leakage levels may have to be considered as an essential requirement; this requirement depends on the flue gas recycle scheme envisaged for the retrofit. For PF power plants with tubular type air-heater, this issue does not exist.

◊ Air ingress: For safety reasons (to prevent leakage of hot gases, dust, CO_2, rich flue gas), the Oxyfuel boiler, similar to conventional air-fired PF boiler, will be designed to operate under slight negative pressure from the burner exit. This approach causes air ingress, from about 3% to levels as high as 10% to 20% (resulting from degradation including poor house keeping) into the boiler, flue gas cleaning equipment (e.g. ESP, FGD) and flue gas duct work. Higher air ingress has a detrimental effect on the CO_2 compression and inerts removal plant performance and CO_2 quality. Hence the air ingress levels need to be minimized. The capture-ready ASC PF Boiler design shall therefore consider the following:-

i. Achievable and maintainable minimum air ingress levels (3% to 5%), in order to economically separate CO_2 and meet the future CO_2 quality requirements.

ii. Modifications in design (all welded duct construction, man holes, inspection ports, penthouse dust suppression systems, ID fan suction) to minimise and maintain air-ingress to an acceptable level.

8.2.4 DeNO$_X$ Equipment

As the Oxyfuel process claims to inherently deliver significantly reduced NO_X, it is anticipated that NO_X emissions can be controlled to meet the vent stream NO_X emission regulations (expressed in mg/MJ or g/kWhr) and CO_2 quality requirements through conventional in-furnace measures. Hence the in-furnace NO_X control measures normally provided in a conventional Air-fired PF Power Plant, to meet environmental regulations, are considered more than adequate for retrofit with Oxyfuel CO_2 capture. If this proves to be true in full-scale Oxyfuel operation,

proprietary $DeNO_X$ measures (SCR/SNCR), provided with the original plant may be bypassed or taken out of service after capture retrofit.

Capture/ removal of NO_X in the CO_2 compression and inerts removal plant is also possible and it is estimated that around 90% NO_X removal, as an acid stream, is possible[29].

Hence, no essential capture-ready requirements are foreseen in the $DeNO_x$ plant.

8.2.5 Particulate Removal Unit (ESP or Bag Filter)

A conventional PF power plant is normally fitted with an electrostatic precipitator (ESP) or bag filter designed to meet the particulate emission level limits imposed by environmental regulations (30 mg/Nm^3 to as high as 150 mg/Nm^3 @ 6% O_2 v/v dry - depending on the country of installation)

The particulate levels will reduce further to as low as 5 mg/Nm^3 @ 6% O_2 v/v dry, depending up on the downstream flue gas cleaning and cooling equipment provided (e.g. FGD, FGC). These levels are considered to be well within limits imposed by CO_2 compression and inerts removal plant.

The capture-ready essential requirements will vary based on the flue gas cleaning scheme and flue gas cooling equipment considered. These are discussed below:

◊ *Plants with ESP or bag filter, wet FGD and future direct contact type flue gas cooler*: The ESP particulate removal efficiency may degrade after retrofit with Oxyfuel CO_2 capture due to operation of the ESP at a higher temperature (compared to that of air-firing), to operate above acid dew point, and change in flue gas composition (the efficiency degradation is largely dependent on the type of coal ash and may not be foreseen with certain type coal). Despite this, no essential capture-ready requirement is foreseen for plants having ESP, wet FGD and flue gas cooler This is discussed below:-

Wet FGD plants are very effective at removing dust from flue gas, and the dust concentration in the outlet flue gas would be expected to be in the region of 5 mg/Nm^3 @ 6% O_2 v/v dry or less. Furthermore, the downstream direct contact type flue gas coolers are also very effective in removing the dust from flue gas. Hence no essential capture-ready requirements are foreseen for PF power plants with such flue gas cleaning schemes.

For plants provided with bag filters, the anticipated changes in process conditions after Oxyfuel retrofit are not expected to impact the bag filter performance. Also the original bag filter material can accommodate the anticipated increase in flue gas inlet temperature. As explained above, further particulate removal is accomplished in the wet FGD and direct contact cooler. Hence no essential capture-ready requirement is foreseen for plants having bag filter, wet FGD and direct contact cooler.

◊ *Plants with ESP or bag filter, dry FGD and future direct contact type flue gas cooler*: Dry FGDs do not contribute to particulate removal. However, the downstream direct contact type flue gas coolers are very effective in removing the dust from flue gas. Particulate levels in the flue gas at the outlet of the direct contact cooler are expected to be well within the limits imposed by CO_2 compression and inerts removal plant. Hence, no essential capture-ready requirements are foreseen for plants with such flue gas cleaning schemes.

---

[29] Sekkappan G, Melling P J, Anheden M, Lindgren G, Kluger F, Molinero I S, Maggauer C and Doukelis A, *Oxyfuel Technology for CO_2 Capture from Advanced Supercritical Pulverised Fuel Power Plants,* 8th International Conference on Greenhouse Gas Control Technologies Trondheim, Norway, 19-22 June 2006

◊ *Plants with ESP or bag filter, dry FGD plant and other type of flue gas cooler*: Dry FGD plant and flue gas coolers other than of the direct contact type may not contribute to additional particulate removal downstream of the ESP or bag filter. Hence, space and provisions should be made available at the discharge side of the particulate removal equipment (example: extra length straight duct, which can be removed later for additional module installation) to enable incorporation of additional particulate removal modules (fields) for meeting the requirements of CO_2 compression and inerts removal plant.

For plants with ESP, SO_3 injection and/or flue gas humidification upstream of the ESP will contribute to additional particulate removal. Hence, instead of space provisions to add ESP modules, provisions in the ESP inlet duct for incorporating SO_3 injection or flue gas humidification in future may be considered.

◊ *Plants with ESP or bag filter, future DCC but without FGD plant*: Direct contact type flue gas coolers are very effective in removing the dust from flue gas. Particulate levels in the flue gas at the outlet of direct contact coolers are expected to be well within the limits imposed by CO_2 compression and inerts removal plant. Hence, no essential capture-ready requirements are foreseen for plants with such flue gas cleaning schemes.

8.2.6 Flue Gas Desulphurisation Unit

The FGD plant normally provided for meeting the environmental regulations for SO_X emissions for new build plants may be bypassed or fully utilised for Oxyfuel CO_2 capture retrofit. These are dependent on the sulphur content in the coal fired and the CO_2 quality requirements for transport, storage and/or other uses (e.g. enhanced oil recovery).

◊ For very low sulphur coals, the original plant FGD can be bypassed while operating in Oxyfuel mode, provided the SO_X level in the CO_2 stream is below the acceptable/ permitted limits for safe transport, storage and/or other uses of CO_2

The future CO_2 quality requirements can be met by removal of SO_X, as an acid stream, in the CO_2 compression and inerts removal plant. It should be noted that almost 100% removal of SO_X is possible in the CO_2 compression and inerts removal plant [30].

◊ For high sulphur coals, FGD will be required for limiting SO_X in the FGR streams to minimize the effects of high temperature and low temperature corrosion of boiler pressure parts and equipment in the flue gas recycle path.

The following also need to be considered in deciding the FGD plant requirements:

◊ Effects on FGD due to change in flue gas process conditions (removal of SO_X from CO_2 rich flue gas saturated with moisture rather than conventional air-fired boiler flue gas), even though a high FGD performance may not be required for Oxyfuel firing.

◊ The replacement of an air-blown sump on a conventional FGD tower with a separate vessel to allow oxidation of the sulphite material in the FGD whilst minimising air in-leakage into the gas path.

◊ Retaining full air-firing capability of the plant after capture retrofit would be the preferred option, as, all the original plant equipment (including flue gas cleaning equipment) are designed considering 100% air-firing and also this

[30] White V, Allam R and Miller E *Purification of Oxyfuel-Derived CO_2 for Sequestration or EOR* 8th International Conference on Greenhouse Gas Control Technologies

option will contribute to maintaining power plant availability in the event of failure of the ASU or the CO_2 purification or compression plant. Hence, even if the fuel fired (low sulphur coal) does not call for the FGD plant to be in service, the FGD plant needs to be retained in place and put into service if required to revert to operation whilst on air-firing mode (after the retrofit) to meet the SO_X limits imposed by environmental regulation.

From the above discussions, it can be concluded that no essential capture-ready features are required in the FGD plant normally provided in air-fired PF power plants to meet the environmental regulations (200 mg/Nm^3 @ 6% O_2 v/v dry).

8.2.7 Steam Turbine Generator and Auxiliaries

The Oxyfuel capture-ready steam turbine generator and auxiliaries are necessarily the same as those of a conventional air-fired PF Power plant without any capture-ready features.

Essential capture-ready features in the steam turbine generator and auxiliaries are not foreseen for future retrofit with Oxyfuel CO_2 capture, except for the following:

◊ Provisions to withdraw low pressure steam for oxygen pre-heating.

◊ Provisions to extract low pressure steam for reactivation of ASU plant driers.

It should be noted that the introduction of Oxyfuel technology and process integration of the water-steam-condensate cycle with capture equipment will result in either:

The reduction of thermal heat load to the steam turbine (and hence reduction of fuel heat input to the boiler by about 2%) to maintain the original plant gross power generation; attributed to the reduced extraction of steam for condensate and feed water heating (despite additional steam requirements indicated above). The condensate and feedwater heating load will be partly achieved through process integration of the water steam cycle with the ASU plant, CO_2 compression plant and the boiler flue gas system.

or

Increased gross power generation, if the steam turbine island is designed to accommodate the possible additional power generation with the same thermal heat load to the turbine as that of air-firing (Increased generation estimated to be from about 1.5% to about 4.5% of original plant gross power depending on the sizing of the steam turbine island equipment).

Some pre-investments can be made to make use of the opportunity available to generate additional gross power while operating the plant with Oxyfuel CO_2 capture. These are discussed in Section 8.3.5.

8.2.8 Water - Steam - Condensate Cycle

Low grade heat available from the Air Separation Unit, boiler flue gas and CO_2 compression plant can be usefully recovered into condensate and boiler feed water systems by process integration of the water-steam-condensate cycle with the above equipment. This integration calls for bypass of a few of the LP/HP heaters as appropriate, provided in a conventional PF power plant, while operating with CO_2 capture. As a result, this leads to a reduction of bleed steam requirements for regenerative feed water heating. To facilitate this, a capture-ready plant should consider the following:

◊ Provision in the water-steam-cycle enabling bypass of the required number of LP/HP feed water heaters (often provided with the original plant itself).

◊ Provision for process integration with the air separation unit, boiler flue gas system and CO_2 compression plant.

◊ Provision to supply low pressure steam to the O_2 pre-heater and ASU driers.

8.2.9 Cooling Water System

The Air Separation Unit, flue gas condenser and CO_2 compression plant introduced for CO_2 capture increases the overall plant cooling duty. Despite this, with steam turbine island equipment sized to accommodate only the same gross output before and after retrofit with Oxyfuel CO_2 capture, no essential capture-ready requirement is foreseen, except for space and provisions for tie-ins. This is explained below:

◊ Process integration with capture equipment (ASU, Oxyfuel boiler flue gas system and CO_2 compression plant) for useful low grade heat recovery to the water-steam-condensate cycle potentially could result in a significant reduction of turbine bleed steam extraction for condensate and feedwater heating. Consequently, there is an increase in mass flow through the LP sections which ultimately delivers additional power generation in the LP sections of the steam turbine. However, this additional gross power generation may be constrained, as the steam turbine island equipment (generator, condenser) are sized to handle only the original air-fired plant (without capture) gross capacity output. Hence, to maintain the same original plant gross output after Oxyfuel capture retrofit, the thermal heat load to the steam turbine (main steam flow) has to be reduced. Also this allows operation of the LP turbine with a higher exhaust pressure (compared to that of the original design) after Oxyfuel capture retrofit, by reducing cooling water flow to the condenser.

The reduction in cooling water flow discussed above along with selection of an appropriate cooling water scheme is expected to offset the additional cooling water flow demand (auxiliary cooling water) by the capture equipment. However, as more heat is rejected to the cooling water system after capture retrofit, the plant cooling load will increase. The essential requirements to handle this are discussed below:

◊ For PF Power Plants with a closed cycle cooling water system with cooling towers, to accommodate the additional cooling load, space and provision should be made available to add cooling towers or modules and the appropriate tie-ins with the already installed auxiliary cooling water system network.

◊ For PF Power Plants with a once through fresh water cooling system, if the cooling water mass flow rate is maintained at the same level prior to and after capture retrofit, the discharge temperature of the cooling water will increase after capture retrofit. If local regulations or permits obtained allow discharge of return cooling water at a slightly higher temperature, no essential capture-ready requirement is foreseen, except for having provisions in the discharge network for extending the discharge pipe work for distribution of the return water over a wider area. If higher discharge temperatures are not permitted, then sufficient space shall be considered to add a discharge side cooling tower or to add a separate cooling water system to cater for the additional requirements.

◊ For power plants with a once through sea water cooling system (main) and fresh water closed loop auxiliary cooling water system, as an essential requirement, space shall be kept to add fresh water cooling towers or modules to cater to the additional auxiliary cooling water demand by capture equipment. Addition of fresh water cooling towers or modules can be avoided, if auxiliaries' cooling is also carried out with sea water. However, as discussed above for once through fresh water cooling, sufficient space shall be considered to add a small discharge side sea water cooling tower or to

add a separate auxiliary cooling water network to cater for the additional requirements.

8.2.10 Compressed Air System

The capture equipment addition will call for additional compressed air requirements. To cater for the future additional compressed air requirements, the following are foreseen as essential requirements:

- ◊ Space for addition of compressed air system components (additional instrument air driers, instrument air receivers).
- ◊ Sizing of compressed air distribution headers to accommodate additional compressed air from newly added compressors and to handle distribution to additional consumers.
- ◊ Other provisions for tie-ins in the system.

8.2.11 Raw Water Pre-treatment Plant

Space shall be considered in the raw water pre-treatment plant area to add additional raw water pre-treatment streams, if required (also refer to Section 8.2.9).

8.2.12 Demineralisation/ Desalination Plant

No essential capture-ready requirements are foreseen, as the demineralised water requirement will not increase after CO_2 capture retrofit.

8.2.13 Waste Water Treatment Plant

Additional effluent streams may arise after capture retrofit and this is explained below:

- ◊ Change in process conditions of the flue gas entering FGD equipment may result in a change in effluent generation or may result in an effluent requiring a different treatment scheme for safe disposal.
- ◊ Removal of SO_X as a part of the CO_2 purification process may result in an effluent requiring a different treatment scheme for safe disposal.
- ◊ Flue gas coolers of direct contact type will result in generation of additional waste water.

Considering the above, if the existing waste water treatment plant capacity is constrained, space for expansion and provisions for integration with the additional treatment stream(s) should be made available.

8.2.14 Electrical

The introduction of an Air Separation Unit, CO_2 compression and inerts removal plant and flue gas coolers will lead to a number of additional electrical loads (e.g. pumps and compressors). This will call for consideration to the following essential capture-ready requirements:

- ◊ Space for additional unit auxiliary transformer (UAT).
- ◊ Provisions in bus ducts to feed the UAT and for power distribution to auxiliaries.
- ◊ Provision in underground cable trenches and above ground cable trays to accommodate additional cables.
- ◊ Space for extension of low voltage (LV) and high voltage (HV) switch gears to accommodate additional incomers, feeders, Motor Control Centres.

8.2.15 Chemical Dosing Systems and Steam Water Analysis System

As no difference in requirements exist before and after CO_2 capture retrofit in the condensate and feed water chemistry, no capture-ready requirements are foreseen in the chemical dosing systems.

With process integration after capture equipment addition, monitoring of condensate and feed water quality at the outlet of heat exchangers is foreseen, because part of the heating of the condensate and feedwater will be undertaken by the ASU, CO_2 compression plant and boiler flue gas system. However, this is not foreseen as an essential capture-ready requirement.

8.2.16 Plant Pipe Racks

Addition of capture equipment and process integration of capture equipment with the water-steam-condensate cycle calls for installation of additional pipe work after the capture retrofit. Additional pipe work broadly includes:-

- ◊ Oxygen pipe work between ASU and boiler island.
- ◊ Condensate pipe work between ASU intercoolers and steam turbine island.
- ◊ Condensate and feed water pipe work between boiler flue-gas heat recovery equipment and steam turbine island.
- ◊ Condensate and feedwater pipe work between CO_2 compressor intercooler(s) and steam turbine island.
- ◊ Steam pipe work for supply of steam for oxygen heating and return of condensate (if steam heating of oxygen is envisaged).
- ◊ Steam pipe work to ASU plant for drier reactivation.
- ◊ Cooling water piping to flue gas cooler.
- ◊ Cooling water piping to ASU and CO_2 compression plant.

To accommodate the above pipe work for the CO_2 capture retrofit, the capture-ready plant should have space at appropriate locations to route the new piping.

8.2.17 Control and Instrumentation

The incorporation of CO_2 capture equipment and integration between power island equipment and CO_2 capture equipment calls for the introduction of additional control components and control loops to ensure reliable and safe operation of the power plant. Additional inputs and outputs resulting from this need to be handled by the plant control system. This will require additional control modules or panels, monitoring systems, additional cabling, as well as change in control software. Hence a capture-ready plant should consider the following as a minimum, to enable incorporation of additional control systems:

- ◊ Space and provision for extension of the control room.
- ◊ Space and provision in cable floor to accommodate additional control/ signalling cables.

8.2.18 Safety

As the introduction of CO_2 capture leads to additional hazards compared to that of a conventional plant without CO_2 capture, as an essential requirement the capture ready plant will require a hazard and operability (HAZOP) management study to account for the impact of the capture equipment on the plant. This will enable proper selection and disposition of all equipment based on the hazard level defined by codes/ standards/ regulations. The following should be undertaken as a minimum:

- ◊ Assessment to meet relevant regulations for handling and storage of near pure oxygen [It should be noted that the hazards associated with storage and use of near pure oxygen are recognised and effectively controlled by a well-developed framework of standards, codes of practice and guidance and these standards and codes are used by other industries for handling these gases. Furthermore, these standards have been developed internationally over many years and are regularly reviewed and revised].
- ◊ Assessment on health and safety issues related to use of CO_2 rich flue gas as Oxyfuel FGR, CO_2 compression and high pressure CO_2 transportation.

8.2.19 Fire Fighting and Fire Protection System

Additional fire fighting measures are required for the Air Separation Unit and oxygen injection zone on account of handling near pure oxygen. These requirements can be met by providing space to accommodate the new fire fighting systems.

Extension of plant fire hydrant network to cater to the capture equipment area is also foreseen. These requirements can be met by simply ensuring provision in the plant fire hydrant net work to enable introduction of additional fire hydrant points during capture retrofit.

8.2.20 Plant Infrastructure

Space at appropriate zones to extend office buildings (to accommodate additional plant personnel after capture retrofit) and space to extend stores buildings are foreseen as essential requirements. Consideration should also be given to how, during a retrofit, vehicles or cranes will access the areas where new equipment will need to be erected.

8.2.21 Planning Permissions and Approvals

A study should be undertaken to ensure that all technical reasons that would prevent installation and operation of CO_2 capture have been identified and eliminated.

It may be beneficial, given local drivers, to obtain planning permissions and similar approvals for eventual retrofit of capture to a plant, but this is not considered to be an essential requirement.

8.3 Possible Pre-Investment Options (Oxyfuel Technology based CO_2 Capture)

The capture-ready options discussed in this section require some pre-investment, to further ease the retrofit of PF Power Plants with Oxyfuel technology based CO_2 capture. These options are not essential to make a PF plant capture-ready and should only be considered if a clear economic benefit can be shown through life cycle analysis. Considerations to the capture-ready options discussed in this section will ease the capture retrofit, reduce plant down time for retrofit, may improve the plant performance after capture retrofit and reduce the penalty from CO_2 capture after capture retrofit (compared, to those of the plants having only the essential capture-ready features or no capture-ready features).

8.3.1 ASC PF Boiler and Auxiliaries

As explained in Section 8.2.3, modifications are required in the ASC PF boiler and auxiliaries area for retrofit with Oxyfuel CO_2 capture. At this stage of Oxyfuel development, no modifications are envisaged for the boiler heating surfaces. Key modifications will therefore be confined to the air system and flue gas system, to enable combustion of fuel with CO_2 rich recycled flue gas and near pure oxygen. Possible pre-investment is foreseen only in the boiler draught equipment and is discussed below.

◊ Depending on fan construction and available design margins, it may be possible to reuse forced draught (FD) fan(s) as the main FGR fan(s) or secondary FGR fans and at start-up as air fan(s) after retrofit with Oxyfuel CO_2 capture. Similarly, it may be possible to reuse primary air (PA) fan(s) as primary FGR fan(s) after retrofit with Oxyfuel CO_2 capture.

The process conditions of Oxyfuel boiler flue gas differ from that of air-fired boiler. Dependent upon the FGR scheme envisaged, the fans may have to handle flue gas with the following conditions:

i. Higher volume flow or lower volume flow

ii. High temperature or low temperature (temperature below acid dew point)

Designing Oxyfuel capture-ready PF boiler draught equipment to cater for the future retrofit requirements will lead to a reduction in the plant outage time required for retrofit. To accommodate the above, the following possible pre-investment options are foreseen:

◊ Variable speed drives for the fans, as appropriate, to handle change in flow and head after retrofit (variable speed drives are often considered in conventional PF plant designs).

◊ Fans casing and impeller material selection to suit Oxyfuel process conditions.

8.3.2 DeNO$_X$ Equipment

No capture-ready pre-investment of value is foreseen. Also refer to discussions in Section 8.2.4.

8.3.3 Particulate Removal Unit (Electrostatic Precipitator or Bag filter)

Although the majority of the flue gas cleaning schemes discussed in Section 8.2.5 can meet the future particulate level limits, pre-investment may be considered in installing dummy modules (fields) in the ESP or bag filter to enable easy incorporation of internals during capture retrofit to meet the future particulate level limits. The advantages of this pre-investment are discussed below:

◊ Avoidance of additional investment required to handle and dispose of the particulates in the effluent discharged from the new equipment items.

◊ Elimination of restrictions on selection of type of future flue gas condenser (note: use of packed bed type flue gas condensers will call for very minimal dust levels to avoid plugging).

◊ Elimination of increase in plant make-up water requirements (due to introduction of flue gas humidification system).

◊ Elimination of increase in plant chemical inventory (due to introduction of SO_3 injection system).

For plants with dry FGD and flue gas condensers which do not contribute to particulate level reduction, pre-investment may be considered for installing dummy modules (fields) in the ESP or bag filter, enabling easy incorporation of internals, to meet the future particulate level limits.

8.3.4 Flue Gas Desulphurisation Unit

No capture-ready pre-investment of value is foreseen. Also refer to discussions in Section 8.2.6.

8.3.5 Steam Turbine Generator and Auxiliaries

Process optimisation could result in a slightly increased gross power output of the steam turbine and generator whilst operating with Oxyfuel CO_2 capture. This is attributed to the reduced extraction of steam for feed water and condensate heating, as the condensate and feedwater heating load will be partly achieved through process integration of the water steam cycle with the ASU plant, CO_2 compression plant and the boiler flue gas system. Pre-investment on optimising the steam turbine generator and auxiliaries design to take advantage of this additional gross power generation can be considered for capture-ready ASC PF plant. The possible pre-investment options vary based on the optimisation strategy adopted for the steam turbine island equipment. Some of the options are given below:

- ◊ Entire steam turbine island equipment sized for optimum performance before and after capture (leads to increase of approximately 4.5 % in the gross power generated without capture, compared to that of PF plant with just the essential capture-ready features; refer to Cases 8 and 8A presented in Section 8.4). This option will call for a larger IP/LP turbine.
- ◊ Generator, generator auxiliaries and condensate pumps marginally over sized to accommodate the possible additional power generation with the original steam turbine (leads to an increase of approximately 2.5 % in the gross power generated without capture, compared to that of PF plants with just the essential capture-ready features; refer to Cases 7 and 7A presented in Section 8.4).

8.3.6 Water - Steam - Condensate (WSC) Cycle

Optimized design of the steam turbine to generate higher gross power after capture equipment addition will lead to a marginal increase in the condensate flow. Also process integration of water steam cycle with capture equipment will lead to marginal changes in boiler feed water pump and condensate pump head requirements. To handle these marginal changes, the following may be considered for pre-investment:

- ◊ Selection and sizing of boiler feed pumps and condensate pumps to handle changes in head and/or flow requirements.

8.3.7 Cooling Water System

The capture-ready pre-investment options for this system will vary depending on the sizing/ selection of steam turbine island equipment. These are discussed below:

- ◊ Process integration with capture equipment (ASU, Oxyfuel boiler flue gas system, CO_2 compression plant) for useful low grade heat recovery to the water-steam-condensate cycle potentially could result in a significant reduction of turbine bleed steam extraction for condensate and feedwater heating. Consequently, there is an increase in mass flow through the LP sections of the steam turbine which ultimately delivers additional power generation in the LP sections. The entire steam turbine island equipment has to be designed to accommodate this additional power. Hence, the cooling water mass flow rate to the main turbine condenser needs to be increased to cater for the additional condenser duty.

  The steam turbine designed to accommodate future additional power generation can be operated with lower condenser pressure (within the design limits) to generate more power even before capture retrofit, by utilising the available condenser cooling capacity. Also refer to cases 8 and 8A presented in Section 8.4.

For capture-ready plants with such steam turbine island equipment design, possible pre investment options in the cooling water system are discussed below:

i. *For plants with closed loop cooling water systems*: Design of the cooling tower, main cooling water pumps and main cooling water pipe work to handle the additional cooling water requirements.

ii. *For plants with once through sea water/ fresh water cooling water systems*: Design of the main cooling water pipe work to handle the additional cooling water requirements.

However, for these capture-ready PF power plants, meeting the additional auxiliary cooling water demand (by capture equipment auxiliaries) by addition of a separate auxiliary cooling system during the capture retrofit is only considered worthwhile. Hence no capture-ready pre-investment for meeting future additional auxiliary cooling demand is envisaged.

◊ For plants having only the essential capture-ready features or an oversized generator along with essential capture-ready features, no pre investment is considered to be of value. Additional cooling water requirements (after capture retrofit) for such capture-ready plants are foreseen only for the capture equipment and these requirements can be met by simply adding a separate auxiliary cooling water system. Also refer to Section 8.2.9 for more details.

8.3.8 Compressed Air System

As capture equipment addition calls for additional compressed air requirements, considerations can be given to the following pre-investment option:

◊ Sizing and selection of capture-ready plant's compressed air system including the estimated future compressed air requirements (this may call for a marginal increase in the capacity of individual compressors, and a corresponding increase in capacity of the driers and receivers).

8.3.9 Raw Water Pre-treatment Plant

Based on the steam turbine island equipment sizing, to cater to the future additional cooling water requirements by the capture equipment, pre-investment can be made in the capture ready plant's raw water pre-treatment plant area by:

◊ Including estimated future additional raw water treatment plant capacity in sizing and selection of capture ready plant's raw water pre treatment plant.

◊ Increase in storage capacity of raw water tank to cater for future increase in storage requirements.

◊ Raw water make-up pumps selection and sizing including the future increase in demand.

8.3.10 Demineralisation/ Desalination Plant

No capture-ready pre-investment is foreseen in this system, as the demineralised water requirement is not expected to increase after the CO_2 capture retrofit.

8.3.11 Waste Water Treatment Plant

Based on the steam turbine island equipment sizing, modifications in the waste water treatment plant for capture retrofit are foreseen to enable the plant to handle the increase in cooling tower blow down water and also the additional effluent discharged from CO_2 compression and purification unit. The former requirement calls for an

increase in waste water treatment plant capacity, whilst the later may call for a different treatment scheme.

Considering the above, pre-investment can be made in the capture-ready plant's waste water treatment plant in the following areas:-

- ◊ Including estimated future additional waste water generation (from cooling tower blow down) in sizing and selection of capture ready plant's waste water pre treatment plant.
- ◊ Sizing and selection of the waste water discharge pipe work to include the estimated additional waste water generated after capture retrofit.

As the effluent from the CO_2 compression and purification unit may need a different treatment regime, a separate waste water treatment stream will have to be installed and interconnected with the waste water discharge network. Hence no pre-investment in the capture-ready plant's waste water treatment to cater to this requirement is considered worthwhile as this separate treatment scheme can be installed along side the capture retrofit.

8.3.12 Electrical

The introduction of an Air Separation Unit, flue gas condenser, CO_2 compression and purification unit will lead to a number of additional electrical loads (e.g. pumps and compressors) and will call for major additions to the plant auxiliary power distribution system. Consideration of pre-investment in the following areas is expected to ease the CO_2 capture retrofit to a greater extent:

- ◊ Design and construction of cable vaults and cable trenches including pull pits and over head cable trays to handle future cabling work.
- ◊ Switchgear and Motor Control Centre (MCC) energizing cable selection considering estimated additional auxiliary power consumption after capture retrofit (excluding power consumption by ASU and CO_2 compression plant, as auxiliary loads for these equipment are considered to be met with a dedicated and separate power supply system).

8.3.13 Chemical Dosing Systems and Steam Water Analysis System

As no difference in requirements in the condensate and feed water chemistry exist for the CO_2 capture retrofit, no capture-ready pre-investments are foreseen in the chemical dosing plant.

With process integration after capture equipment addition, monitoring of condensate and feed water quality at the outlet of heat exchangers is foreseen, because part of the heating of the condensate and feed water will be undertaken in the ASU, boiler flue gas system and CO_2 compression plant. Pre-investment can be considered for provisions in the steam and water analysis system sampling network and panels for easy addition of these sampling points.

8.3.14 Plant Pipe Racks

Consideration of following capture-ready pre-investments will ease the addition of new pipe work required for the retrofit. Refer to Section 8.2.16 for a list of pipe work.

- ◊ Design of pipe rack structures (in the vicinity of the respective systems) to handle additional pipe loads.
- ◊ Provisions in pipe racks in the vicinity of the respective systems to accommodate additional piping.

8.3.15 Control & Instrumentation

The incorporation of an ASU, CO_2 compression and inerts removal plant, and process integration of the water-steam-condensate cycle with the capture equipment calls for introduction of additional control components and control loops to ensure reliable and safe operation of the power plant. Additional I/Os resulting from this need to be handled by the plant control system. This will call for additional control modules and panels, monitoring systems and additional cabling. Based on the estimated additional I/O s, pre-investment can be made in:-

- ◊ Designing the plant control system including the estimated additional I/Os required in the future.
- ◊ Sizing the plant network (data highway) to handle (estimated) future additional signals.

It should be noted that often DCS and Historian systems are licensed for a specified number of I/O channels and may not allow easy expansion. The above pre-investments will eliminate this risk and ease the integration of capture equipment control system with the main plant control systems.

8.3.16 Safety

No capture-ready pre-investment is foreseen.

8.3.17 Fire Fighting and Fire Protection System

No capture-ready pre-investment is foreseen.

8.3.18 Planning Permission and Approvals

A study should be undertaken to ensure that all technical reasons that would prevent installation and operation of CO_2 capture have been identified and eliminated.

It may be beneficial, given local drivers, to obtain planning permissions and similar approvals for eventual retrofit of capture to a plant, but this is not considered to be an essential requirement.

8.3.19 Plant Infrastructure

No capture-ready pre-investment is foreseen.

8.4 Impact on Plant Performance: Conventional vs Capture-Ready PF Power Plants (Capture Technology – Oxyfuel Combustion)

8.4.1 Introduction

The assessment has been carried out considering the performance data provided in IEA GHG Report No 2005/9[31] as a basis and considers the following to assess the impact of providing capture-ready features:-

- ◊ Retrofit for PF Power Plants without any capture-ready features (Case 5, 5A).
- ◊ Retrofit for PF Power Plants with essential capture-ready features (Case 6, 6A).
- ◊ Retrofit for PF Power Plants with capture-ready pre-investment (Case 7, 7A) in addition to essential features. It should be noted that this pre-investment case considers only pre-investment for the generator and its auxiliaries and not all pre-investments discussed in this report.

[31] *Oxy Combustion Processes for CO_2 Capture from Power Plant*, IEA GHG R & D Programme Report No. 2005/9, July 2005

◊ Retrofit for PF Power Plants with capture-ready pre-investment (Case 8, 8A) in addition to essential features. It should be noted that this pre-investment case considers pre-investment in steam turbine island equipment and main turbine cooling water system to get better performance before and after capture retrofit (compared to other options discussed). The case does not consider all possible pre-investments discussed in this report.

8.4.2 Basis

Reference: IEA GHG Report No 2005/9[31]

The data presented in Table 8.1 are derived from the estimated performance of a 740 MW_e (gross) ASC PF bituminous coal-fired Power Plant with Oxyfuel CO_2 Capture provided in the above referenced IEA GHG report. Major design considerations are as detailed below:

Plant size	740 MW_e (gross) with and without CO_2 capture (Case 5 in Table 8.1) (This case is considered as the base case for estimating the performance of other cases.)
Site data	
Location	Coastal
Ambient air temperature	9°C
Relative Humidity	60%
Atmospheric pressure	1.013 bar
Fuel	Australian bituminous coal, LHV = 25870 kJ/kg (IEA GHG's standard design coal)
Boiler	Advanced SuperCritical Pulverised Fuel Boiler
Fuel heat input	1530.9 MW_{th}
$DeNO_X$ system	SCR
$DeSO_X$ system	Limestone-gypsum wet FGD in boiler island
Steam Turbine	Advanced Supercritical Steam Turbine
Steam parameters	
HP steam	290 bar and 600°C
IP steam	60 bar and 620°C
Condenser pressure	40 millibara
Condenser cooling	Sea water @ 12°C
Boiler feed water pumps	Electrically driven
Air Separation Unit	Cryogenic ASU
Oxygen purity	95%
CO_2 compression and inerts removal plant	Two-stage flash separation
CO_2 quality	>95%
CO_2 recovery	> 85%

8.4.3 Case Descriptions and Assumptions

For all cases presented in Table 8.1, the overall design 'heat input rate' is kept the same. This basis is considered as an appropriate plant sizing criterion to evaluate the impact of capture-ready features on performance.

Cases 5, 5A: Non-Capture-Ready ASC PF Bituminous Power Plant

Case description

No capture-ready features are considered. Retrofit with Oxyfuel CO_2 capture is still considered possible in these plants. However, with normally adopted air-fired PF power plant design, the following are considered to be necessary and achievable during CO_2 capture retrofit:-

- ◊ Incorporation of Oxyfuel FGR system.
- ◊ Incorporation of an Air Separation Unit.
- ◊ Incorporation of CO_2 compression and inerts removal plant.
- ◊ Process integration between main plant equipment and capture equipment.
- ◊ Incorporation of additional electrical equipment (auxiliary transformers, cabling, switch gears).

It is assumed that the arrangement of a conventional air-fired ASC PF Power Plant, without any capture-ready features, does not necessarily facilitate the following:

- ◊ Handling of additional steam flow in IP/LP sections of the steam turbine.
- ◊ Accommodation of higher power output (after retrofit) in the generator.
- ◊ Handling of additional heat loads in the condenser.
- ◊ Handling of additional cooling water flow in the cooling water system.
- ◊ Other modifications and additions to BoP systems.

Furthermore, the difficulty of the retrofit (for plants without capture-ready features) will be dependent upon the original plant layout.

Case 5 in Table 8.1 presents the performance of the PF power plant prior to capture retrofit and Case 5A presents the performance of the PF power plant after capture retrofit.

Gross Power Generation

With 1530.9 MW_{th} fuel heat input, the air-fired ASC PF power plant without CO_2 capture is estimated to generate 740 MW_e gross power and 679 MW_e net power.

The Oxyfuel CO_2 capture retrofit provides process integration opportunities to recover low grade heat from the capture equipment into the water-steam-condensate cycle. This could result in a significant reduction of bleed steam extraction from the steam turbine for feed water and condensate heating and possible additional gross power generation in the steam turbine. However, this additional gross power generation is constrained, as the steam turbine island equipment (generator, condenser, etc.) considered in this case are sized to handle only the original air-fired power plant gross capacity output. Hence, to maintain the same original plant gross output after retrofit (740 MW_e),the thermal heat load to the steam turbine (main steam flow) has to be reduced by some 2% during operation with capture to maintain original plant gross output [i.e. the steam generation capacity of the boiler is not fully utilised during operation with capture].

The plant net power output reduces to about 529 MW_e after retrofit; primarily due to auxiliary power consumption by the ASU and CO_2 compression plant.

Auxiliary Power Consumption

The auxiliary power consumption for Cases 5, 5A presented in Table 8.1 is arrived at by considering the following:

◊ Operation without capture (Case 5)

Auxiliary power consumption is estimated based on details provided in IEA GHG Report No 2005/9. The additional auxiliary power consumption due to the resistance imposed by greater than normal duct lengths and greater than normal piping length (provisions incorporated to ease capture addition) were considered to be negligible.

◊ Operation with capture (Case 5A)

i. The bituminous coal considered has about 0.9% w/w sulphur (as received) and will require the FGD plant to be in service for Oxyfuel CO_2 capture.

ii. SCR bypassed - Oxyfuel combustion process is claimed to inherently deliver significantly reduced NO_X. It is expected that NO_X emissions can be controlled to meet the vent stream NO_X emission regulations (expressed in mg/MJ) and CO_2 quality requirements through conventional in-furnace measures. Furthermore, the CO_2 purification process will remove about 90% of the NO_X as nitric acid[32].

iii. Reduced ID fan power consumption and lower flue gas flow with Oxyfuel firing.

iv. Reduced FD (FGR or SFGR) fan power consumption on account of reduced volume flow under Oxyfuel firing conditions.

v. Reduced boiler feed pump power on account of some 2% reduction in steam generation (steam turbine thermal heat load is reduced to limit steam turbine gross output to the original design output after capture retrofit).

vi. No change in cooling water (once through sea water cooling) system power consumption. The additional cooling water flow requirement for capture equipment is assumed to be met by lowering the cooling water supply to the main turbine condenser, having the appropriate cooling water scheme and discharging the return cooling water (sea water) at a slightly higher temperature.

vii. No significant changes in other BoP equipment power consumption is expected, as expansions of these systems are not considered (except for waste water treatment plant addition).

Cases 6 and 6A: ASC PF Power Plant with 'Essential' Capture-Ready features

Case description

This case considers only essential capture-ready features (space provisions and tie-ins only) and is not very different from Case 5. The plant eases capture equipment

[32] White V, Allam R and Miller E *Purification of Oxyfuel-Derived CO_2 for Sequestration or EOR* 8th International Conference on Greenhouse Gas Control Technologies

addition with space and provisions at appropriate locations. The following are considered possible for the capture retrofit:

- ◊ Incorporation of Oxyfuel FGR system.
- ◊ Incorporation of an Air Separation Unit.
- ◊ Incorporation of CO_2 compression and inerts removal plant.
- ◊ Process integration between main plant equipment and capture equipment.
- ◊ Incorporation of additional electrical equipment (auxiliary transformers, cabling, switch gears).
- ◊ Expansion and extension of BoP systems

Similar to Case 5, Case 6 with just the capture-ready essential features also does not necessarily facilitate the following:-

- ◊ Modifications to the steam turbine to handle additional steam flow in the IP/LP sections.
- ◊ Modifications to the generator for accommodating higher power output.
- ◊ Modifications to the condenser to handle additional heat loads.
- ◊ Modifications to the main condenser cooling water system to handle additional flow.

Gross Power Generation

With 1530.9 MW_{th} fuel heat input, the air-fired ASC PF power plant without CO_2 capture is estimated to generate 740 MW_e gross power and 679 MW_e net power.

Similar to Cases 5 and 5A, additional gross power generation is constrained. Hence, to maintain the same original plant gross output after retrofit (740 MW_e),the thermal heat load to the steam turbine (main steam flow) has to be reduced by some 2% during operation with capture to maintain the original plant gross output i.e. the steam generation capacity of the boiler is not fully utilised during operation with capture.

The plant net power output reduces to about 529 MW_e after retrofit; primarily due to auxiliary power consumption by the ASU and CO_2 compression plant.

Auxiliary Power Consumption

The auxiliary power consumption for Cases 6, 6A presented in Table 8.1 is arrived at by considering the following:

- ◊ Operation without capture (Case 6)

  Auxiliary power consumption is estimated based on details provided in IEA GHG Report No 2005/9[33]. The additional auxiliary power consumption due to the resistance imposed by greater than normal duct lengths and greater than normal piping length (provisions incorporated to ease capture addition) were considered to be negligible.

- ◊ Operation with capture (Case 6A)

  Assumptions/ considerations discussed under Case 5A are applicable for this case also.

[33] *Oxy Combustion Processes for CO_2 Capture from Power* Plant , IEA GHG R & D Programme Report No. 2005/9, July 2005

Cases 7 and 7A: ASC PF Power Plant with Essential Capture-Ready features and Some Pre-investment (Oversized Generator)

Case description

Case 7 is an ASC PF Power Plant with essential capture-ready features installed and over-sized generator and condensate pumps. This case is not very different from Case 6, except for the generator and condensate pumps sizing. With slightly over-sized generator and condensate pumps, it is estimated that around 2.5% additional gross power can be generated from the same fuel heat input. This plant also has the same considerations as described under Case 6 and Case 6A above and in addition, the following:

◊ The boiler steam generating capacity is fully utilized after the capture retrofit. The generator and associated auxiliary equipment and the condensate pumps are marginally oversized (about 2.5% higher rating) to accommodate the additional power generation after capture retrofit. This additional power generation is due to reduced extraction of steam utilised for condensate and feed water heating, as these heating duties are partly achieved through process integration of the water steam cycle with Air Separation Unit and CO_2 compression plant.

  Even though the possible additional power generation is higher than 2.5% whilst operating with capture, this advantage cannot be fully utilized, as the capacity of the IP/LP turbine(s) and the condenser / main cooling water system capacity restricts this.

Gross Power Generation

With 1530.9 MW_{th} fuel heat input, the air-fired ASC PF power plant without CO_2 capture is estimated to generate 740 MW_e gross power and 679 MW_e net power.

With slightly over-sized generator and condensate pumps, it is estimated that around 2.5% additional gross power can be generated from the same fuel heat input. The plant net power output reduces to about 544 MW_e after retrofit; primarily due to auxiliary power consumption by the ASU and CO_2 compression plant.

Auxiliary Power Consumption

The auxiliary power consumption for Cases 7, 7A presented in Table 8.1 is arrived at by considering the following:-

◊ Operation without capture (Case 7)

  i. Auxiliary power consumption is estimated based on details provided in IEA GHG Report No 2005/9[34]. The additional auxiliary power consumption due to the resistance imposed by greater than normal duct lengths and greater than normal piping length (provisions incorporated to ease capture addition) were considered to be negligible.

  ii. Marginally higher condensate pump power consumption on account of operation of the pump at a lower load (3 x 60% pumps or 2 x 120% assumed instead of conventional arrangement of 3 x 50% pumps or 2 x 100% pumps to cater to the increased flow while operating with capture; these pumps operate at lower load while operating without capture).

◊ Operation with capture (Case 7A)

[34] *Oxy Combustion Processes for CO_2Capture from Power Plant*, IEA GHG R & D Programme Report No. 2005/9, July 2005

Assumptions/ considerations discussed under Case 5A are applicable for this case also, except for the following changes and additions:

i. No changes to the boiler feed water pump power, as the boiler steam generation capacity is fully utilized after capture retrofit.

ii. Increased cooling water system power consumption as the main cooling water flow is maintained and an additional auxiliary cooling water system is installed to cater to the capture equipment cooling water requirements.

iii. Slightly increased power consumption by other BoP equipment, as the make up and blow down system size marginally increases.

iv. Transformer, cable and bus duct losses proportionately increased based on gross power output.

Cases 8 and 8A: ASC PF Power Plant with Essential Capture-Ready Features and Some Capture-Ready Pre-investment (Optimized Steam Turbine Island)

Case description

Case 8 is an ASC PF Power Plant with essential capture-ready features and with optimised steam turbine island equipment. This case considers a steam turbine designed for optimum performance before and after capture. Whilst operating without capture, utilising the full condenser heat duty (designed for capture conditions), it is possible to generate greater gross / net power.

The boiler steam generating capacity is fully utilized after the capture retrofit. The steam turbine, generator and associated auxiliaries (condensate pumps, main cooling water pumps including main cooling water piping) are marginally oversized (compared to Case 5). This enables additional power generation after capture retrofit. This additional power generation is due to reduced extraction of steam utilised for condensate and feed water heating, as these heating duties are partly achieved through process integration of the water steam cycle with Air Separation Unit and CO_2 compression plant.

Gross Power Generation

With optimised steam turbine island equipment, it is estimated that some 1.5% additional gross power can be generated before the retrofit from the same fuel heat input and by utilising the full condenser heat duty (designed for capture conditions). With 1530.9 MW_{th} fuel heat input, the air-fired ASC PF power plant without CO_2 capture is estimated to generate 752 MW_e gross power and 689 MW_e net power.

The additional gross power generated after Oxyfuel capture retrofit is estimated at approximately 4.5%, compared to that of the PF Power plants without capture-ready features or with just the essential capture-ready features (Cases 5 and 6). With 1530.9 MW_{th} fuel heat input, the Oxyfuel ASC PF power plant with CO_2 capture is estimated to generate 775 MW_e gross power and 559 MW_e net power.

Auxiliary Power Consumption

The auxiliary power consumption for Cases 8 and 8A presented in Table 8.1 is arrived at by considering the following:-

◊ Operation without capture (Case 8)

i. Auxiliary power consumption is estimated based on details provided in IEA GHG Report No 2005/9. The additional auxiliary power consumption due to the resistance imposed by greater than normal duct lengths and greater than normal piping length (provisions incorporated to ease capture addition) were considered to be negligible.

ii. Marginally higher condensate pump power consumption on account of operation of the pump at a lower pumps load (3 x 60% pumps or 2 x 120% assumed instead of conventional arrangement of 3 x 50% pumps or 2 x 100% pumps to cater to the increased flow while operation with capture, these pumps operate at lower load while operating without capture).

iii. Higher cooling water system power consumption due to increased condenser cooling water flow during operation without capture.

◊ Operation with capture (Case 8A)

Assumptions and considerations discussed under Case 7A are applicable for this case also, except for the following changes and additions:

i. Slightly higher ID fan power consumption compared to that of Case 6A on account of maintaining the same fuel firing rate.

ii. Slightly higher FD (SFGR) fan power consumption compared to that of Case 6A on account of maintaining the same fuel firing rate.

iii. Increased cooling water system power consumption due to increased condenser cooling water flow and an additional auxiliary cooling water system installed to cater to the capture equipment auxiliary cooling water requirements.

iv. Increased power consumption by other BoP equipment, as the make up and blow down system size marginally increases.

v. Transformer, cable and bus duct losses proportionately increased based on gross power output.

8.4.4 Equipment List: Conventional vs Capture-Ready PF Bituminous Power Plants

Table 8.2 presents the Equipment List for the various capture-ready cases discussed in Section 8.4.3, in comparison to a conventional PF Power Plant without any capture-ready features.

Table 8.3 presents the additional equipment required for capture retrofit for the cases discussed (Cases 5A, 6A, 7A and 8A)

8.4.5 Capital and Operating Expenses: Conventional vs Capture-Ready PF Bituminous Power Plants

Estimates of Capital and Operating Expenses (CAPEX & OPEX) for Post Combustion Capture-ready PF Plants are derived from the CAPEX and OPEX data provided in IEA Report No 2005/9. As the referred IEA report cost data is based on a 2003 basis, a 25% escalation is considered for CAPEX and a 15% escalation has been considered for the labour part of the OPEX for arriving at year 2006 cost.

Table 8.4 and Table 8.5 present the CAPEX and OPEX respectively of the different Oxyfuel technology based capture-ready PF cases discussed in Section 8.4.3.

8.4.6 Summary of Results

A summary of the impact on plant performance after capture retrofit for the cases investigated is presented below:

	Case 5A	Case 6A	Case 7A	Case 8A
Fuel heat input, MW_{th}	1502.5	1502.5	1530.9	1530.9
Gross power output, MW_e	740	740	758	775
Net power output, MW_e	529	529	544	559
Net plant efficiency, % LHV	35.2	35.2	35.5	36.5
CO_2 capture penalty, %age points (compared to air-fired PF power plant efficiency of 44.3% LHV; Case 5)	9.1	9.1	8.8	7.8

The results conclude that capture-ready pre-investments such as those considered of oversized generator and optimised steam turbine equipment reduces the CO_2 capture penalty by about 0.3 to 1.3%age points (penalty expressed as net plant efficiency) compared to that of non-capture-ready PF power plants retrofitted with CO_2 capture. These capture-ready pre investments can be made if a clear economic benefit can be shown through life cycle analysis.

8.5 Capture-Readiness for Oxyfuel <u>and</u> Post-Combustion Capture

It should be noted that a PF Power Plant design can be capture-ready for either technology i.e. a plant may adopt design options that would facilitate the future retrofit of either post combustion or Oxyfuel technologies. In many cases, the requirements for the two technologies are different - for instance different modifications may be required in the turbine train for the two technologies so that there would be little or no synergy in that plant area. Other possible pre-investments such as expandable control systems and plant infrastructure will be equally applicable to either retrofit technology.

Table 8.1: Impact on Performance – CO_2 Capture-Ready vs Non-Capture-Ready PF Power Plants; Capture Technology – Oxyfuel Combustion

		Estimated Performance *'before'* **CO_2 Capture Addition**				**Estimated Performance** *'after'* **CO_2 Capture Addition**			
		Case 5 **Non-Capture-Ready ASCPF Air Fired Power Plant** (conventional plant)	**Case 6** **ASCPF Air Fired Power Plant** *with* *'essential'* **capture-ready features**	**Case 7** **ASCPF Air Fired Power Plant** *with* *'essential'* **capture-ready features** *& marginally oversized generator & condensate pumps*	**Case 8** **ASCPF Air Fired Power Plant** *with* *most promising* **capture-ready** *'pre-investments'* *(optimised STG & WSC/ BoP Equipment)*	**Case 5A** Case 5 operation *with* CO_2 capture	**Case 6A** Case 6 operation *with* CO_2 capture	**Case 7A** Case 7 operation *with* CO_2 capture	**Case 8A** Case 8 operation *with* CO_2 capture
Gross Power Generation	MW_e	740.0	740.0	740.0	752.0	740.0	740.0	758.0	775.0
Fuel Input	kg/s	59.2	59.2	59.2	59.2	58.1	58.1	59.2	59.2
Fuel Heating Value (LHV)	MJ/kg	25.86	25.86	25.86	25.86	25.86	25.86	25.86	25.86
Fuel Heat Input	MW_{th}	1530.9	1530.9	1530.9	1530.9	1502.47	1502.47	1530.9	1530.9
Auxiliary Power Consumption									
Mills	MW_e	2.2	2.2	2.2	2.2	2.2	2.2	2.2	2.2
Forced Draught Fans (FGR Fans)	MW_e	2.5	2.5	2.5	2.5	1.9	1.9	2.0	2.0
Induced Draught Fans	MW_e	3.2	3.2	3.2	3.2	2.1	2.1	2.2	2.2
Primary Air Fans (Primary FGR Fans)	MW_e	1.5	1.5	1.5	1.5	1.5	1.5	1.5	1.5
Emission Control (ESP)	MW_e	2.0	2.0	2.0	2.0	2.0	2.0	2.0	2.0
$DeSO_X$ Unit (wet FGD)	MW_e	7.0	7.0	7.0	7.0	7.0	7.0	7.0	7.0
$DeNO_X$ Unit (SCR)	MW_e	0.3	0.3	0.3	0.3	-	-	-	-
Coal & Ash Handling	MW_e	1.8	1.8	1.8	1.8	1.8	1.8	1.8	1.8
Boiler Feed Pumps	MW_e	25.9	25.9	25.9	25.9	25.4	25.4	25.9	25.9
Condensate Pumps	MW_e	1.5	1.5	1.55	1.55	1.5	1.5	1.9	1.9
Cooling Water & Auxiliary Cooling Water System	MW_e	5.6	5.6	5.6	7.0	5.6	5.6	6.2	7.7

Table 8.1 (continued): Impact on Performance – CO_2 Capture-Ready vs Non-Capture-Ready PF Power Plants; Capture Technology – Oxyfuel Combustion

		Estimated Performance *'before'* CO_2 Capture Addition				Estimated Performance *'after'* CO_2 Capture Addition			
		Case 5 **Non-Capture-Ready ASCPF Air Fired Power Plant** (conventional plant)	**Case 6** **ASCPF Air Fired Power Plant** *with* *'essential'* **capture-ready features**	**Case 7** **ASCPF Air Fired Power Plant** *with* *'essential'* **capture-ready features** *& marginally oversized generator & condensate pumps*	**Case 8** **ASCPF Air Fired Power Plant** *with* *most promising* **capture-ready** *'pre-investments'* *(optimised STG & WSC/ BoP Equipment)*	**Case 5A** Case 5 operation *with* CO_2 capture	**Case 6A** Case 6 operation *with* CO_2 capture	**Case 7A** Case 7 operation *with* CO_2 capture	**Case 8A** Case 8 operation *with* CO_2 capture
Steam Turbine Auxiliaries (lube oil system, etc.)	MW_e	0.5	0.5	0.5	0.5	0.5	0.5	0.5	0.5
Transmission and distribution losses (transformer, cable, bus duct & excitation losses)	MW_e	3.0	3.0	3.0	3.0	3.1	3.1	3.1	3.2
Others (make-up water system, water treatment system, waste water disposal system, HVAC, C& I)	MW_e	4.4	4.4	4.4	4.8	4.4	4.4	4.4	5.0
Air Separation Unit & Auxiliaries	MW_e	-	-	-	-	87.0	87.0	88.0	88.0
CO_2 Compression Plant	MW_e	-	-	-	-	65.0	65.0	65.6	65.6
Total auxiliary power	MW_e	61.4	61.4	61.45	63.25	211.0	211.0	214.2	216.4
% of gross electric power output	%	8.3	8.3	8.3	8.4	28.5	28.5	28.3	27.9
Net power	MW_e	678.6	678.6	678.55	688.75	529.0	529.0	543.8	558.6
Gross efficiency of Plant	% LHV	48.34	48.34	48.34	49.12	49.05	49.34	52.97	50.50
Net Plant Efficiency	% LHV	44.3	44.3	44.3	45.0	35.2	35.2	35.5	36.5
CO_2 capture penalty	%age points	-	-	-	-	8.70	8.70	8.40	7.42
CO_2 emissions	g/kWh(net)	721	721	721	711	85	85	83	81

Table 8.2 : Equipment List – Prior to CO_2 Capture Retrofit; Capture Technology – Oxyfuel Combustion

UNIT / SYSTEM	Case 5 **Non-Capture-Ready ASCPF Air Fired Power Plant** (conventional plant)	Case 6 **ASCPF Air Fired Power Plant** *with* *'essential'* **capture-ready features**	Case 7 **ASCPF Air Fired Power Plant** *with* *'essential'* **& capture-ready pre-investments** *(an oversized generator / condensate pumps)*	Case 8 **ASCPF Air Fired Power Plant** *with* *'essential'* **capture-ready pre-investments** *(optimised STG & WSC/ BoP Equipment)*
Unit 100 Coal and Ash Handling	Coal delivery equipment Bunkers Yard equipment Transfer towers Dust suppression system Ventilation Equipment Belt feeders Metal detection system Belt weighing equipment Bottom ash conveying system Fly ash conveying system	Same as Case 5	Same as Case 5	Same as Case 5
Unit 200 Advanced Supercritical Boiler Island	Furnace Superheater Reheater Economiser Regenerative airheaters Boiler integral pipe work Forced draught fans Primary air fans Induced draught fans Air & Flue gas duct work Structures and platforms Circulation pumps Coal feeders Chemical dosing equipment Boiler drains system Electrostatic precipitator	Same as Case 5, with the following: Provisions in ducting / piping to ease interconnections while capture retrofit (example: additional length ducting/ additional length piping to accommodate interconnections, dampers, etc.)	Same as Case 5, with the following: Provisions in ducting / piping to ease interconnections while capture retrofit (example: additional length ducting/ additional length piping to accommodate interconnections, dampers, etc.)	Same as Case 5, with the following: Provisions in ducting / piping to ease interconnections while capture retrofit (example: additional length ducting/ additional length piping to accommodate interconnections, dampers, etc.)
Unit 300 Flue Gas Desulphurisation & Handling Unit	Limestone storage, feeding system Spray tower absorber Reaction tank Recirculation pumps/ wash pumps Mist eliminators Slurry recycling, handling system Gypsum handling system	Same as Case 5	Same as Case 5	Same as Case 5

Table 8.2 (continued) : Equipment List – Prior to CO_2 Capture Retrofit; Capture Technology – Oxyfuel Combustion

UNIT / SYSTEM	Case 5 **Non-Capture-Ready ASCPF Air Fired Power Plant** (conventional plant)	Case 6 **ASCPF Air Fired Power Plant** *with* *'essential'* **capture-ready features**	Case 7 **ASCPF Air Fired Power Plant** *with* *'essential'* & **capture-ready pre-investments** *(an oversized generator / condensate pumps)*	Case 8 **ASCPF Air Fired Power Plant** *with* *'essential'* & **capture-ready pre-investments** *(optimised STG & WSC/ BoP Equipment)*
Unit 400 $DeNO_X$ Unit (SCR)	Reactor casing Ammonia injection equipment & Static mixer Ammonia storage and handling system	Same as Case 5	Same as Case 5	Same as Case 5
Unit 500 Advanced Supercritical Steam Turbine Island	HP, IP & LP turbines Turbine generator Generator transformer Lube oil system Steam surface condenser Condensate pumps LP feed water heaters Deaerator Boiler feed pumps (electrical) HP feed water heaters Turbine island integral pipe work Gross o/p = 740 MW_e/740 MW_e	Same as Case 5, with the following: Provisions in piping to ease interconnections while capture retrofit (example: additional length piping to accommodate interconnections for integration & heat recovery from ASU/ CO_2 compression plant) Gross OUTPUT = 740 MW_e	Same as Case 6 with Oversized generator & condensate pumps. Gross o/p = 740 MW_e	Same as Case 6, with the following: Optimised steam turbine island equipment Gross o/p = 752 MW_e
Unit 800 Balance of Plant Equipment & Electrical	Cooling water pumps Plant make-up water system Raw water treatment plant Demineralisation/ Desalination plant Waste water treatment plant Chemical dosing system Fire detection/protection system Storage tanks Compressed air system BoP piping Auxiliary transformers Bus ducts and cables Cable trays HV & LV switch gears Control panels Plant lighting Plant control system	Same as Case 5	Same as Case 5	Same as Case 5 with Marginally oversized cooling tower Marginally oversized CWP

Table 8.3: List of additional equipment required for CO_2 Capture Retrofit; Capture Technology – Oxyfuel Combustion

UNIT / SYSTEM	Case 5A **Non-Capture-Ready ASCPF Air Fired Power Plant** (conventional plant)	Case 6A **ASCPF Air Fired Power Plant** *with* '*essential*' **capture-ready features**	Case 7A **ASCPF Air Fired Power Plant** *with* '*essential*' **&** **capture-ready** '*pre-investments*' *(oversized generator / condensate pumps)*	Case 8A **ASCPF Air Fired Power Plant** *with* **'essential' &** **capture-ready** '*pre-investments*' *(optimised STG & WSC/ BoP Equipment*
Unit 100 Coal and Ash Handling	No additional equipment.	No additional equipment.	No additional equipment.	No additional equipment.
Unit 200 ASC PF Boiler Island	(longer) Secondary flue gas recycle duct work	Secondary flue gas recycle duct work	Secondary flue gas recycle duct work	Secondary flue gas recycle duct work
	(longer)Primary flue gas recycle ductwork	Primary flue gas recycle ductwork	Primary flue gas recycle ductwork	Primary flue gas recycle ductwork
Unit 300 Flue Gas Desulphurisation & Handling Unit	No additional equipment	No additional equipment	No additional equipment	No additional equipment
Unit 400 $DeNO_X$ Unit (SCR)	No additional equipment (by-passed)	No additional equipment (by-passed)	No additional equipment (by-passed)	No additional equipment (by-passed)
Unit 500 ASC Steam Turbine Island	No additional equipment	No additional equipment	No additional equipment	No additional equipment
Unit 600 Air Separation Unit	Air separation unit			
	Air compressors			
	Air purification system			
	Heat exchangers			
	HP/IP/LP columns	Same as Case 5A	Same as Case 5A	Same as Case 5A
	Reboilers and condensers			
	Oxygen back up system			
	Integral pipe work			
Unit 700 CO_2 Compression + Inerts Removal Plant	Flue gas coolers			
	Heat exchangers			
	Driers			
	Inerts removal system	Same as Case 5A	Same as Case 5A	Same as Case 5A
	Compressors			
	Integral pipe work			
Unit 800 Balance of Plant Equipment & Electrical	Auxiliary cooling water pumps	Addl. auxiliary cooling water pumps	Addl aux cooling water supply system	Addl aux cooling water supply system
	Additional BoP pipe work	Additional raw water treatment train(s)	Additional raw water treatment train(s)	Additional raw water treatment train(s)
	Additional unit auxiliary transformer	Additional waste water treatment units	Additional waste water treatment units	Additional waste water treatment units
	Additional switch gears & panels	Additional BoP pipe work	Additional BoP pipe work	Additional BoP pipe work
	Additional control system modules	Additional unit auxiliary transformer	Additional unit auxiliary transformers	Additional unit auxiliary transformers
	Additional bus ducts/ cables	Additional switch gears & panels	Additional switch gears & panels	Additional switch gears & panels
		Additional control system modules	Additional control system modules	Additional control system modules
		Additional bus ducts/ cables	Additional bus ducts/ cables	Additional bus ducts/ cables

Table 8.4: Capital Cost–CO_2 Capture-Ready vs Non-Capture-Ready PF Power Plants; Capture Technology – Oxy-Fuel Combustion

	Investment cost: 740 MW_e Capture-Ready plant Capture Technology: Oxyfuel (million €)				Additional cost for Oxyfuel CO_2 Capture Retrofit (million €)			
	Case 5	**Case 6**	**Case 7**	**Case 8**	**Case 5A**	**Case 6A**	**Case 7A**	**Case 8A**
	Non-Capture-Ready	Capture-ready Essential	Capture-ready Marginally oversized generator/ condensate system	Capture-ready Optimised	Non-Capture-Ready	Capture-ready Essential	Capture-ready Marginally oversized generator	Capture-ready Optimised
Power generation, MW_e (gross)	*740*	*740*	*740*	*752*	*740*	*740*	*758*	*775*
Power generation, MW_e (net)	*678.6*	*678.6*	*678.6*	*688.8*	*535.4*	*535.4*	*550.2*	*565*
Heat input, MW_{th}	*1530.9*	*1530.9*	*1530.9*	*1530.9*	*1502.5*	*1502.5*	*1530.9*	*1530.9*
Unit 100, Coal Handling System	50	50	50	50	0	0	0	0
Unit 200, Boiler Island + ESP	216	216	216	216	21	18	18	16
Unit 300, FGD	75	75	75	75	0	0	0	0
Unit 400, DeNOx system	16	16	16	16	0	0	0	0
Unit 500, Steam Turbine Island	123	123	124	128	1	1	1	1
Unit 600, Air Separation Unit + Oxygen heater	0	0	0	0	184	184	184	184
Unit 700, CO_2 compression/ Inerts removal plant	0	0	0	0	72	72	72	72
Unit 800, BoP Equipment (including Oxygen pipework/ Oxygen injection system in case of retrofit), Electricals, Civil	167	167	168	170	7	7	12	14
Front end engineering and design of project	0	3	3	3				
Capture addition cost	n/a	n/a	n/a	n/a	285	282	287	287
TOTAL INSTALLED COST	**647**	**650**	**652**	**658**	**285**	**282**	**287**	**287**
Contingency (@ 10%)	65	65	65	66	29	28	29	29
Owner's cost (@ 5%)	32	33	33	33	14	14	14	14
TOTAL INVESTMENT (2003 cost - see note 2)	744	748	749	757	328	324	330	330
TOTAL INVESTMENT (2006 cost) (25% increase from 2003 cost)	**930**	**934**	**937**	**946**	**410**	**405**	**413**	**413**

Notes:
1. The capture-ready PF power plant report is based on IEA GHG Report No. 2005/9 [2]
2. 2003 Cost data provided in IEA GHG Report No.2005/9 [2] for PF power plant is used, as appropriate, for the above estimates. Detailed cost estimation has not been carried out.
3. The above estimation is based on the Oxyfuel PF Plant PFD scheme considered in IEA- Report No.2005/9 [2]
4. For case definitions/ design basis, refer to Section 4.4 of this report.

Table 8.5: O & M Cost–CO_2 Capture-Ready vs Non-Capture-Ready PF Power Plants; Capture Technology Oxyfuel Combustion

	Before CO_2 Capture Retrofit (see Note 2) O & M cost/ year, million € (yearly operating hours = 7446)				**After CO_2 Capture Retrofit** (see Note 2) O & M cost/ year, million € (yearly operating hours = 7446)			
	Case 5	**Case 6**	**Case 7**	**Case 8**	**Case 5A**	**Case 6A**	**Case 7A**	**Case 8A**
	Non-Capture-Ready	Capture-ready Essential	Capture-ready Marginally oversized generator/ condensate system	Capture-ready Optimised	Non-Capture-Ready	Capture-ready Essential	Capture-ready Marginally oversized generator	Capture-ready Optimised
Power generation, MWe (gross)	*740*	*740*	*740*	*752*	*740*	*740*	*758*	*775*
Power generation, MWe (net)	*678.6*	*678.6*	*678.6*	*688.8*	*535.4*	*535.4*	*550.2*	*565*
Heat input, MWth	*1530.9*	*1530.9*	*1530.9*	*1530.9*	*1502.5*	*1502.5*	*1530.9*	*1530.9*
VARIABLE								
Fuel (see note 1)	61.54	61.54	61.54	61.54	60.4	60.4	61.54	61.54
Make up water for FGD and power plant auxialiaries	0.03	0.03	0.03	0.03	0.03	0.03	0.04	0.04
De NO_X catalyst	2.96	2.96	2.96	2.96	0	0	0	0
Chemicals	1.64	1.64	1.64	1.64	1.64	1.64	1.64	1.64
Waste disposal	0	0	0	0	0	0	0	0
Miscellaneous	0.28	0.28	0.28	0.28	0.28	0.28	0.28	0.28
Total variable operating expenses	*66.45*	*66.45*	*66.45*	*66.45*	*62.35*	*62.35*	*63.5*	*63.5*
FIXED								
Direct labor (15% increase considered w.r.t. 2003 cost)	6.44	6.44	6.44	6.44	7.82	7.82	7.82	7.82
Administration (15% increase considered w.r.t 2003 cost)	1.93	1.93	1.93	1.93	2.35	2.35	2.35	2.35
Maintenance	25.84	25.84	25.84	25.84	32.6	32.6	32.6	32.6
Total fixed operating expenses	*34.21*	*34.21*	*34.21*	*34.21*	*42.77*	*42.77*	*42.77*	*42.77*
Total O & M	**100.66**	**100.66**	**100.66**	**100.66**	**105.12**	**105.12**	**106.27**	**106.27**

Notes:
1. Fuel price = €1.5/GJ and Fuel NCV = 25870 kJ/kg
2. OPEX data provided in IEA GHG Report No.2005/9 [2] for PF power plant is used.

9 DESIGN REVIEW - NATURAL GAS COMBINED CYCLE CAPTURE-READY PLANT

The retrofit of capture to CCGT plant was considered in detail in IEA-GHG report 2005-1[35]. The following text summarises the scope and findings of 2005-1.

The study was based on a 785 MWe CCGT power plant featuring 2xGE 9FA gas turbines. It reviewed the technical and economic implications of retrofitting that plant with CO_2 capture and considered the following five technical options.

- Post combustion capture of CO_2
- Pre-combustion reforming of natural gas and capture of CO_2 at the power plant site
- Pre-combustion reforming of natural gas and capture of CO_2 at a remote site
- Gasification of coal and pre-combustion capture at the power plant site
- Gasification of coal and pre-combustion capture at a remote site.

Engineering assessments were carried out and the economics of capture were determined relative to the base-case plant. Sensitivity analyses were carried out to determine the variability of economics with fuel price, discount rate and time before retrofit was made. Potential barriers to retrofit were identified and options to address them in initial plant design were considered.

Key issues were considered to be:

Plot space/Accessibility

The estimated areas for post-combustion capture plant, gas reforming and coal gasification with pre-combustion capture were 250x150m, 175x150m and 475x375m (excluding coal store) respectively. This is likely to be a key issue for CCGT plants which have a small footprint and where the additional footprint required will form a significant proportion of the entire plant footprint. For the post-combustion capture case, in particular, this area needs to be adjacent to the power plant. Additional area will also be required for construction, with space restrictions leading to potential delays during construction if materials need to be delivered to site 'just in time'. There are also issues of site access when bringing large items such as ASUs or CO_2 absorbers on site. A restricted site may result in the requirement for on-site fabrication of such equipment and impacts on timescales and quality control.

Space within installation

Major new pipe-runs will be required within the installation, for instance to accommodate the increased volumetric flow to the GT combustors or to take the required steam flow to the CO_2 solvent regeneration. These changes are expensive to achieve in plant designed without retrofit in mind, but relatively low cost if space is reserved at the initial design stage.

Changed process conditions

Installation of capture may lead to changes in heat balance in the cycle. Changed firing temperatures in pre-combustion capture will affect heat pickup in the HRSG, potentially leading to wet steam in turbines, and erosion damage. It is possible that heat transfer surface may need to be moved within the HRSG to ameliorate this effect and generous sizing of the HRSG (which will have a cost) may facilitate this.

For post-combustion capture installations, the additional pressure drop across the capture plant may require the retrofit of an induced draft (ID) fan. Provision of space in the appropriate area can make this significantly easier and cheaper.

[35] "*Retrofit of Capture to Natural Gas Combined Cycle Power Plants* - IEA-GHG Report 2005/1 January 2005"

Demin. Water Capacity

The study assumed that NOx abatement is achieved by steam injection into a conventional (not dry low-NOx) burner and therefore a significant flow of demin. water is required, which in turn requires a suitably sized demin. water facility.

Cooling Water Capacity

The requirement grows when capture is fitted. The total cooling water capacity should be assessed for adequacy when the plant is build and civil engineering works should be sized to accommodate the ultimately required flows. Actual pumping capacity can be added at the time the additional flow is required - i.e. when capture is fitted.

Operational Flexibility

Retrofit of capture may impact operational flexibility. Inlet guide vane control used for low load operation in CCGT mode may also be required for when low-CV gas is burned and this may compromise the minimum operational load achievable. Alternatively, the response of ASU or gasifier plants (in capture operation) may be significantly more sluggish than the base CCGT plant and thus be the limiting factors in determining rate of load change.

Permitting

The report recognises that consenting for a plant can be a time-consuming process and recommends consideration of an approach where both non-capture and capture operation are permitted as part of the same application.

Fuel Storage and Transport

The storage of fuel or the transport of high pressure syngas from site should be sited to minimise potential impact on local residents or property.

Suggested Improvements for Process Integration

The report also makes recommendations for two additional innovations to improve the overall performance of plant if capture is fitted.

The two major recommendations are:

1. That the GT compressor be fitted with a bleed to allow (some of) the air to be taken off for use in the ASU of a pre-combustion capture plant so that the air plant integration can be optimised.

2. That a study is carried out to determine how best to integrate the low grade heat available in a capture mode, particularly whether it is preferable (or possible) to put the steam generated from the pre-combustion capture plant into the main steam cycle.

The report overall concludes that the technical barriers to capture of CO_2 from CCGT can be overcome through consideration at the design stage and that the lowest cost option is post-combustion capture at around 70-90$/tonne of CO_2 avoided.

The report's authors, Jacobs Engineering, also suggest that the retrofitting of coal gasification plant with CO_2 capture might be advantageous in markets with low coal and high gas price and that these plants can be run in capture-ready mode until there is a requirement for capture.

Overall, however, the abatement costs of all the options of fitting capture to CCGT plant are high and the authors recommended that, for this reason, no further work on the topic was carried out. The majority of this document, therefore, centres on assessment of capture options for coal-fired plant.

10. DESIGN REVIEW OF COAL-FIRED IGCC CAPTURE-READY PLANT

When an IGCC plant is retrofitted with carbon capture, a number of new plant elements are required and a number of the existing systems need to be reconfigured or operated at different capacity.

Since the syngas from a gasifier contains a mixture of CO and CO_2, and the target gas composition requires as high a partial pressure as possible of CO_2, a shift reactor is required to drive the reaction

$$CO + H_2O \leftrightarrows CO_2 + H_2$$

This is an exothermic equilibrium reaction and is driven to the right by low temperatures and high partial pressures of H_2O. At low temperatures, though, the reaction is slow and so standard practice is to have a two-stage process with the first reaction conducted at higher temperature to promote rate of reaction and the second undertaken at lower temperature to increase % CO_2 formation and drive down CO contents to low levels.

Most shift systems therefore have two reactors in series, with intermediate cooling, to promote an optimum compromise between rate of reaction and equilibrium conversion. The intermediate cooling is generally provided by a system which preheats feedwater or raises steam and which needs to be integrated into the steam cycle.

As the forward reaction is promoted by the partial pressure of water, this needs to be increased, either by quench or the addition of (process) steam into the stream. If the gasifier is of a quench design, no further injection may be necessary, whilst for designs which feature radiant coolers, the required water/steam injection will alter the overall thermodynamics.

Since this reaction is exothermic, the net effect is that the H_2-rich gas that now passes to the GT has a lower calorific value than the original syngas. Therefore, either the GT must be derated or the original gasifier design must be oversized to allow the required flow of fuel to the GT to be maintained. The oversizing of systems needs to extend not just to the gasifier, but also the coal feed systems, air separation unit and other plant elements that will need to cope with the full gas or solid flow.

In the initial phase of operation, prior to CO_2 capture, there is the possibility of increasing plant profitability by using syngas for supplementary firing of the HRSG or of using ‘excess’ syngas to produce other products for sale.

When the plant moves to CO_2 capture, the existing acid gas removal (AGR) equipment must be modified, or a column added, so that it is capable of removing CO_2 in addition to H_2S, chlorides, etc. and, if purified CO_2 is the desired product, then a two-stage process is required. CO_2 is released from the solvent by heating (in which case steam is needed) or by pressure let-down. The hydrolysis plant which is required to convert COS to H_2S before capture is not required when a shift reactor is included in the system and this equipment can be removed when the plant moves to operate with capture.

After a plant is converted to CO_2 capture, the fuel gas to the gas turbines changes markedly in composition, with the majority of the calorific value now included in the hydrogen in the gas. The combustion properties of hydrogen are significantly different from either syngas or natural gas and include dramatically higher flame speed and, in the absence of dilution, significantly higher flame temperatures (and hence NOx emissions).

It is essential to ensure that the GT included after capture is fitted is capable of safe operation with hydrogen rich gas. In addition, it is essential to ensure that the plant can continue to meet the required environmental constraints on this type of fuel. Specifically, techniques will need to be implemented to ensure that the required NOx target can be met, either through burner design and inerting with nitrogen (from the ASU) or steam or, if this proves not to be possible, through the addition of a downstream SCR unit in the HRSG casing.

Modern gas turbines firing natural gas have reduced the peak flame temperature through lean premixed combustion. Peak flame temperature is a function of the equivalence ratio of the fuel/air mixture, with a peak flame temperature occurring at an equivalence ratio just above 1.0 (i.e., a slightly fuel rich mixture). By operating at an equivalence ratio of less than 0.5, and ensuring the fuel and air are well premixed prior to combustion, peak flame temperatures are much reduced. This leads to lower levels of NOx formation.

This approach is not applicable when utilising hydrogen as a fuel. The high flame speeds, low ignition energy and wide flammability limits of hydrogen make it impossible to premix the fuel and air without suffering from a flashback of the flame. Such a flashback would effectively result in a diffusion flame anchored to the fuel nozzles and would cause significant burner damage and high levels of NOx.

Instead, diffusion combustion is used when firing hydrogen. By designing the fuel nozzles for diffusion combustion, the flame can be located sufficiently downstream of the nozzles to avoid damage. The drawback to this approach is the high peak flame temperatures that occur in a diffusion flame as the fuel and air mix at the flame front, effectively creating a stoichiometric mixture. This results in much higher levels of NOx.

In diffusion systems, the only way to reduce the peak flame temperature is through the addition of a diluent to act as a heat sink. This diluent could be any inert material. Examples include steam, water, nitrogen, carbon dioxide, etc. Steam and water, typically injected into the head end of the combustor, have a negative effect on parts life within the combustion system and of the hot gas path components. However, they have historically been used as they were readily available from the steam cycle of a CCGT plant, albeit to the detriment of overall cycle efficiency.

In IGCC applications utilising oxygen-blown gasification, nitrogen as a diluent has been preferred as it is readily available from the air separation unit (ASU). It also has less of an impact on parts' life.

The performance of an HRSG in a plant fitted with capture will be significantly different from that of a baseline plant. The radiative properties of the combustion products will be different (the combustion products are now high in H_2O, and low in CO_2). The steam demands of the system will be significantly changed, with the details depending on how the overall integration is configured, for instance whether the CO_2 compressor is electrically or steam-driven and the use of steam upstream of the shift reactor and in the acid gas recovery plant. These will all impact the overall boiler cycle efficiency.

Again, depending on the form of the steam integration of the revised system, steam flows to the turbine train will be different from the baseline case and ST modifications may be necessary to ensure that the system can cope with, and be optimised for, the new flows.

As alluded to above, with all technologies seeking to produce a CO_2 stream suitable for storage, a drying and compression train is then required to elevate the CO_2 to the required conditions for transport or storage. Such compression systems typically include interstage cooling and produce relatively low-grade heat which needs to be

either dissipated or, to maximise overall efficiency, integrated into the overall thermal cycle.

10.1 Description of Essential Capture Ready Requirements

As a minimum, a capture-ready plant should have eliminated all the factors that would prevent a retrofit taking place. The design should include provision for space to install, and access to install, all elements of a capture plant that are not included in the initial installation.

10.1.1 Description of Necessary Pre-investment options.

As with all the capture technologies described in this document, it is necessary that a potential route to storage has been identified for CO_2 once it has been captured and a credible method by which the CO_2 can be moved to the sink has also been established.

It is also essential that sufficient land is acquired to allow all the necessary capture equipment to be fitted, to allow access to both new and existing plant before, during and after construction and to allow sufficient on-site storage for lay-down of equipment during the construction/conversion process.

In the case of an IGCC, space should be available for the installation, as a minimum, of:

- Two-stage shift reactor
- A supplementary acid gas removal column
- Heat exchangers associated with the above.
- CO_2 drying and compression plant.
- Pipe runs to allow heat exchange integration to be modified.
- Modified GT burner systems (if required).
- High capacity gas feed pipes to the GT combustor.
- Inclusion of SCR (if required) within the HRSG

In addition it will be good practice to ensure that common plant systems such as C&I, data acquisition, fire control etc, compressed air, etc. are configured with an architecture that allows them to be expanded at a later date at minimum cost. Such a requirement can have zero cost, but significantly reduce the cost of future expansion to these systems.

10.1.2. Description of Possible Pre Investment Options

There are a wide range of pre-investment options that could be made at the construction stage of a plant.

ASU/Gasifier Capacity

The gasifier and air separation unit ASU can both be sized such that, if the plant is converted to CO_2 capture, it can still feed sufficient hydrogen-rich, lower CV, gas to fully load the GT. If this is done, then the production capacity of these plants in the early years of operation, before capture, exceeds the capacity of the GT. This approach has been examined in some detail by, for example, Parsons in a study for EPRI [36]. The implications of the approach have already been summarised in Table 5.1 and some of the economic implications are explored in Section 11 below.

The implications of this will depend on other site specific issues. If the plant is close to a consumer of N_2 and O_2, then it may be possible to sell excess production of these, so that the maximum output of the ASU is used at all times. As an alternative, and to

[36] Rutkowski, M., Schoff, R., Holt, N. and Booras, G., 2003, *Pre-Investment of IGCC for CO_2 Capture with the Potential for Hydrogen Co-Production*, Gasification Technologies 2003, San Francisco, CA, October 12-15, 2003. (http://www.gasification.org/Docs/2003_Papers/29RUTK_paper.pdf)

also fully utilise the full gasifier capacity the plant can be configured in such a way that the excess syngas which cannot be burned in the GT is used for supplementary firing of the HRSG.

It has been mooted (Gibbins 2006) that this mode of operation could be used at times of high power price, to boost the output of the plant and to maximise commercial return. The economic attractiveness of this approach will depend on the local market drivers and perhaps crucially on the volatility of the power price. Markets where the value of power changes on an hourly basis, or faster, may be unattractive for this type of plant configuration since this implies a requirement to operate the plant flexibly, possibly at a greater rate than the ASU/gasifier system is capable of. However, for markets where the variation in price is seasonal (i.e. high prices all summer), the supplementary firing option may be attractive. It is possible to envisage a scenario where an ASU run at full capacity all year is used to make syngas for supplementary firing in summer and, in winter is used to supply O_2 and N_2 to local customers. This scenario assumes, of course, that a local market exists for these gases and that the recipient is sufficiently flexible to allow trades of this type to be acceptable.

In the above scenarios, when the plant is subsequently fitted with capture, the spare capacity disappears from the system. The gasifier now supplies enough syngas for the GT alone and the ASU has no excess gases to trade and the income is derived from the base output of the GT and HRSG alone.

It is possible, of course, to over-design either system, so that there would still be more gas for trading or supplementary firing but, even in these circumstances, the conclusion remains that these revenue streams fall significantly as capture is implemented.

It is unlikely that any pre-investment would be made in the shift reactor system which was only used when the plant moves toward capture. The same will apply to the ultimate CO_2 compression hardware, and any associated drying equipment. These plant items are of no value until CO_2 capture commences and it is therefore difficult to envisage circumstances in which up-front capital investment in their purchase would be favoured, unless this were to be a regulatory requirement.

It should be noted that Jacobs have proposed a system using their Gasification Enabling Module GEM^{TM}, in which a shift reactor is used from the point when the plant is commissioned, with the GT firing shifted syngas during initial (non-capture) operation and then, when capture is required, CO_2 separation equipment is fitted and the, largely un-modified, GT is fired on a mix of hydrogen-rich gas and diluent N_2. This approach, as outlined in Section 5.2 above, has the benefit of requiring minimal changes to the GT combustion system and of keeping the ASU and gasifier fully loaded throughout the plant's operational life (i.e. whether in capture or non-capture mode) and reducing downtime for retrofit but at the disadvantage of reduced efficiency (around 5% additional fuel consumption) and increased initial capital cost.

It is possible to envisage pre-investment in a two-column AGR system where both columns were originally used for H_2S capture (i.e. one operational, one spare) and one is subsequently converted to act as the CO_2 capture device. This approach has the benefit of offering a potential enhancement to plant availability, at the cost of significant additional up-front investment. It is also dependent on the ability to design a second column capable of being configured for either CO_2 or H_2S capture. If AGR availability were to be a major factor (which experience on coal-based IGCC systems suggests it is generally not) then this might offer an attractive financial return, although, of course, after conversion to CO_2 capture, the system would have no redundancy and availability would potentially fall.

The GT combustion system may be designed to be optimised for syngas or hydrogen-rich decarbonised gas. It will generally also need to be capable of operation on a start-up/backup fuel - normally natural gas or gas-oil. In an ideal world, the initial burner system installed would be capable of burning all of these fuels at optimum efficiency, stably and with low pollutant emissions (typically NOx, CO and dust) and, in that case it would clearly make sense to install such a burner system from day one.

However, at the current time, when extensive burner development is under way to increase the percentage of hydrogen that can be burned, and to minimise the amount of dilution required to do it, it appears unlikely that any supplier could currently supply a burner capable of firing all the required fuels. Under these circumstances, the preferred option would appear to be to fit a firing system capable of firing both syngas and backup fuel, but with an identified strategy to replace that combustion system at a later date when either (a) a composite firing system has been developed capable of operating on all fuels or (b) the move to carbon capture is made in which case the system is optimised for H_2 combustion and retains the capability to fire back-up fuel. An outline strategy can be developed by which the initial combustion system could be replaced, although of course this presupposes that such systems can be developed and that, when they are, they are of a physical form that is capable of retrofit to a particular engine.

Burner development represents one example of the technology 'lock-in' that will be implicit in many areas of capture-ready technology since, by selecting an initial GT supplier, a purchaser is effectively making the assumption that a H_2 combustion system can be developed for it. If this proves not to be the case, then there is a possibility that the plant could never operate in carbon capture mode, or that the GT would need to be replaced (at very high cost) by a machine from a different supplier which was capable of the required operation. Alternatively, it is possible that a H_2 burner for the GT may be successfully developed, but that an alternative supplier will develop a significantly better, more efficient or cleaner system, which will place the plant at a commercial disadvantage. The latter scenario is familiar in most project development and represents a common commercial risk. The former case is potentially much more serious, effectively closing out the possibility of ever moving a plant to carbon capture because a vital element of the technology, assumed at the planning stage, does not become available.

Another option that might be considered for multi-unit sites is to construct a gasifier site with, say, five gasifiers and four GTs. Initially the fifth gasifier could operate as a spare on the system, allowing other units to be taken out for repair or maintenance. This approach is likely to increase the overall load factor for a multiple unit site and help to avoid financial penalties from unplanned outages. However, based on past experience, it could also be argued that a spare gasifier may be required for IGCC plant to meet the reliability and availability standards of current pulverised coal-fired units. After conversion, the plant could operate with all five gasifiers in service to supply the increased flow demands of the gas turbines. This is clearly a high capital cost option but, given that the world's requirement is for large quantities of new plant to be built and that these are likely to be concentrated in multiple unit sites, it may be an option worth considering. Another promising option is to build an additional plant at the same time as capture is retrofitted, since this could be sized to handle the extra steam available. Plants could also operate independently, but with reduced output/efficiency.

10.2. Performance Estimation of IGCC CO_2 Capture Ready Plants

A number of project developers are currently taking forward power generation projects to construct new coal-fired IGCC plants, with or without CO_2 capture. Projects include those led in the UK by E.ON UK and Centrica, in Germany by RWE and, in the USA, by Southern Company, Duke Energy and AEP. There is also the collaboratively funded - DOE supported Futuregen project in the USA. In addition there are multiple projects under development in China to deploy coal-to-liquids or coal-to-chemicals coal gasification installations. The coal gasification field is exceedingly active and the rate of innovation is likely to be high in coming years as the experience base for the technology grows rapidly.

The power generation projects are mostly at the pre-feasibility stage or undertaking Front End Engineering Design - or FEED, where the project developers spend significant sums of money (perhaps in the region of $10M) to obtain price estimates correct to around 10%. Given the amount of investment that developers are putting into these projects to develop commercial knowledge, it is unsurprising that there is little cost or detailed performance data available from them.

Accordingly the data that is available on which to make judgements is that which has become available as the result of published studies such as those summarised in tabular form in Tables 4.4.1 and 4.4.2 earlier in this document [37,38] or in studies such as Jacobs Consultancy (2005)[39]. Many OEMs are also reticent to provide cost estimates in the public domain since this information is commercially sensitive.

Although these studies have been detailed, they have not involved construction of plants, nor have they typically been funded at the level that is required for a FEED study. Since, even after a FEED study has been completed, there remains a considerable uncertainty in the capital cost of a new-build project, there must therefore be significant uncertainty in both the estimated economics of construction and of long-term operational performance that have resulted from the other analyses.

Other factors play into this assessment also. The choice of gasifier and the choice of gas turbine both alter the overall mass and energy balance of the process and determine the optimum level of integration and, in fact, the MW rating that can be achieved. There are a wide number of technology combinations potentially available and, as such, there is not yet a clear picture of the overall economic optimum solution (or its cost) for even a 'simple' IGCC without capture.

As an example, a recent study for the US DOE to quantify the potential impact of successful R&D on future IGCC listed case studies for twelve different IGCC configurations (without capture) which they analysed. These are included for illustration as Table 10.1. The table is far from exhaustive but is does readily illustrate the rapid way in which technology options can proliferate.

---

[37] Rutkowski, M., Schoff, R., Holt, N. and Booras, G., 2003, *Pre-Investment of IGCC for CO_2 Capture with the Potential for Hydrogen Co-Production*, Gasification Technologies 2003, San Francisco, CA, October 12-15, 2003. (http://www.gasification.org/Docs/2003_Papers/29RUTK_paper.pdf)

[38] Griffiths, J. and Scott, S., 2003, *Evaluation of Options for Adding CO_2 Capture to ChevronTexaco IGCC*, Gasification Technologies 2003, San Francisco, CA, October 12-15, 2003. (http://www.gasification.org/Docs/2003_Papers/28GRIF.pdf)

[39] *Impact of CO_2 Removal on Coal Gasification Based Fuel Plants* - Report from Jacobs Consultancy to DTI December 2005

Table 10.1 Some Possible different IGCC configurations

Case	Description	Capacity Factor	Carbon Utilisation	Turbine Class	Sulphur Removal	Air Separation	Other
1 Base	Single stage Slurry gasification	75%	95%	F	Scrubber	Cryogenic	
2	Single stage Slurry gasification	85%	95%	F	Scrubber	Cryogenic	
3	Single stage Slurry gasification	85%	98%	F	Scrubber	Cryogenic	
4	Two stage Slurry gasification	85%	98%	F	Scrubber	Cryogenic	
5	Dry Feed Gasifier	85%	98%	F	Scrubber	Cryogenic	
6	Dry Feed	85%	98%	FB	Scrubber	Cryogenic	
7	Dry Feed	85%	98%	FB	SCOHS	Cryogenic	
8	Dry Feed	85%	98%	FB	SCOHS	Ion Transport Membrane	
Date 2010							
9	Dry Feed	90%	98%	FB	SCOHS	Ion	
10	Dry Feed	90%	98%	H	SCOHS	Ion	
11	Dry Feed	90%	98%	GT	SCOHS	Ion	SOFC
11	(60) Dry Feed	90%	98%	GT	SCOHS	Ion	SOFC 60% eff.
Date 2020							

It is therefore exceptionally difficult to give any firm guidance on the likely long-term economic optimisation of IGCC systems to be fitted with capture. The design studies referred to above give excellent insights into the important parameters and suggest possible strategies for moving forward. The economic parameters which they have produced could readily be used in economic projections (as outlined in Section 11.2, below) However, until performance data is available to validate their assumptions at scale, then the potential error bars on any resultant economic projections must be assumed to be rather large.

10.3 Equipment List

The Jacobs report cited in 10.2, above, provides extensive equipment lists for different design options of coal-fired IGCC, with or without capture and, in their case, using the approach of a Gasification Enabling Module (GEM). The exact equipment list to be deployed on other designs will depend on the configuration of plant chosen, but will be generally similar in scope to what is included in that report.

10.4. Capital & Operating Costs

Capital and operating costs will become much more accurate as the various FEED studies come to fruition and the first real orders for IGCC plant in a decade are placed. Thus, whilst the various studies alluded to above are again excellent sources for exploring the relative impacts of different design decisions, the true costs will emerge in the marketplace over coming years. As the technology matures, the costs are likely to change markedly with time and so it is essential that project developers monitor not just current prices but the future developments expected. This is particularly true for capture-ready plant, since the capture technology for retrofit will not be finally selected until a decision to complete that retrofit has been made. It is also important to note that many costs will also be site-specific and/or technology-specific.

11. ECONOMICS AND GLOBAL APPLICATION

11.1. Implications of Technological Advancements in the Capture Technology on Capture Ready Plants

The development of a capture-ready power plant potentially locks the developer into two different technologies, the choice of the main generation technology and the choice of capture technique. Some generation technologies such as supercritical pulverised coal are amenable to more than one capture technology (e.g. amine capture or oxyfuel) whilst others such as IGCC effectively determine the capture technology that can be applied - solvent capture. There are therefore risks that, if technology develops significantly with time, either:

(a) A project developer selects a generation technology on the basis that it is the most promising for subsequent CO_2 capture, but later developments actually result in improvements to another technology which, in the long term, make it more economically attractive. It is possible to envisage a situation whereby a developer invests in IGCC on the basis that they believe it offers the lowest cost of generation once capture is fitted but subsequent development of post-combustion capture dramatically cuts the cost of that technology so that, ultimately, the combination of pulverised coal with post-combustion capture is significantly more economic than IGCC with capture.

b) **A developer builds a new technology with extensive provision for subsequent capture and implements design compromises so that the plant will be optimised once capture is fitted, but subsequent technological developments mean that the capture process develops to a point where its requirements are dramatically different from what was assumed, with the result that when it is implemented, the retrofit solution is no longer optimised.** This could occur, for instance, if a PF plant were constructed with the assumption that it would later be retrofitted with post-combustion amine capture with a requirement to use 40% of the low pressure steam to regenerate the amine and the turbine train for that plant was designed in such a way as to be able to operate with 100% of steam flow, but to be optimised at 60% of steam flow. If solvent developments were to be successful in their drive to reduce energy consumption considerably (e.g. the current initiative by EPRI, Alstom et al. to develop a chilled ammonia scrubber) so that only, say, 15% of the steam flow were required for regeneration, then the turbine system would be significantly sub-optimal after the retrofit were made, unless further investment were made in the turbine at that time.

There is clearly an element of risk in making pre-investment to ensure capture-readiness. In the limit, the plant may never be retrofitted, in which case the investment is lost. Also, the greater the period between construction and retrofit, the greater is the likelihood that technological developments will prevent the full value of the pre-investment being realised - as outlined in the examples above.

11.2. Application of Capture Ready Concept across the Globe

A wide range of factors will govern the economic attractiveness of investment in new capture-ready power plants worldwide.

The absolute costs of building and operating a power plant, of whatever design, are dependent on a number of different cost contributors including land purchase, labour, equipment supply (materials and manufacture) and fuel purchase.

Clearly these costs may vary with market. For example, the cost of labour (either during construction or operation) in markets such as the US and Western Europe is markedly higher than in China or India and the cost of coal in a pit-head installation

using Indonesian coal is dramatically lower than at an inland European power plant importing the same fuel.

The value of power produced also depends markedly on local conditions and varies significantly from market to market world-wide, depending on (amongst other factors), cost to produce, cost to transmit to consumers, regulation and whether the local system is over or under-supplied.

Different markets may move towards carbon capture at different rates and may also deploy different incentives to drive the process which might include carbon taxes; local cap-and trade schemes; regional cap-and trade schemes; regulation of emitted CO_2 concentration; CO_2 intensity measures (e.g. the CO_2/MWh); regulatory requirement to fit carbon capture. Each of these scenarios potentially creates a different effective value for CO_2 capture.

The regulation of other emissions may also impact the cost of retrofitting CO_2 capture to a power plant. A particular instance is the retrofit of post-combustion amine scrubbing to plants initially fitted with different degrees of flue-gas desulphurisation, to meet the local emission regulations. Since the SO_2 must ultimately be reduced to the same level for amine capture to be effective, the retrofit cost of CO_2 capture is higher for a plant initially built with less sulphur abatement. However, the overall investment in a capture plant is likely to be lower in this example. Not only is the expenditure on the FGD deferred, but the exact requirements for the amine process (or possibly post-combustion capture using a different solvent chosen at the time of retrofit) can be met at the time of purchase and benefits associated with integration (e.g. flue gas cooling) can also be achieved.

Another key element in determining the cost of CO_2 capture is the cost of storage in different markets and, including the cost of transport of CO_2 once captured, to a suitable sink (aquifer, oil-field, gas field or coal-field). In some locations (for instance for plants bordering the North Sea in NW Europe), the disposal options are reasonably close and well understood or under the plant itself. In other areas such as the continental US the nearest suitable sink may be several hundred kilometres away while in other regions such as China storage may not have been fully characterised[40].

In summary, there are a large number of region-specific costs that will determine the relative economics of different power plant configurations and these will all need to be considered when considering the attractiveness of pre-investment options beyond essential capture-ready requirements, to enhance a plant's capture-readiness.

11.3. Factors influencing/ investment decisions on Capture Ready Plants

The key factor in the decision making on any new power plant is the maximisation of through-life profit. Key elements that contribute to this determination, as they relate to capture-readiness are:

- Cost to build the plant
- Cost to operate the plant (pre-capture)
- Cost to convert the plant
- Cost to operate the plant (post-capture)
- Time from first operation to conversion
- Plant life
- Discount rate for investment

In the early stages of a new power project, many of these parameters will be unclear. The required discount rate for an investment (which will be set by the financial

[40] CSLF Project Regional Opportunities for CO_2). Regional Opportunities for CO_2 http://www.cslforum.org/documents/SummariesofProposedProjects.pdf

requirements of the organisation involved) will be known and the capital costs for different initial designs are typically determined by a commercial tendering process. The cost to operate the plant is a function of fuel price, efficiency, price of power, price of CO_2 and a number of other variables. In general, it is more predictable in the early years of plant operation when market conditions are closest to those that pertained when the investment was made, but become gradually less certain as time progresses.

The cost to convert the plant will, of course, depend on the conversion made. An initial planning assumption might postulate the retrofit of a particular technology and the economics of that retrofit might be built into the overall through-life assessment. As time passes, the expectation is that technologies will develop. The hope is that the market will deliver the most cost-effective capture technology. As such, the cost of retrofit should fall with time. However, this conclusion is dependent on the original design being consistent with the 'optimum' retrofit. This point is particularly relevant if significant modifications are made to a baseline design on the assumption that a particular retrofit technology will be installed and this subsequently proves not to be the optimum retrofit. The greater the time period between plant installation and the technology retrofit, the greater is the likelihood that technology develops in the interim and that at least some of the pre-investment to make the plant 'capture-ready' for a particular technology is non-optimal.

The discount rate required for a given market will depend on its perceived level of uncertainty. Where a market is considered volatile or uncertain, investors will typically try to gain a return on their investment faster, when there is a greater likelihood that the market can be predicted, and will apply an accelerated discount rate. In markets where there is long-term stability, investors will typically apply a lower discount rate. Higher discount rates tend to favour the minimisation of initial capital cost and they will therefore be less likely to deliver pre-investment in 'capture-ready' modifications even if these were to lead to significant savings on the costs of converting the plant to capture, or in its subsequent operating costs post-capture.

The timing of a CO_2 capture retrofit may be driven by a number of mechanisms as alluded to in Section 11.2 above, either because it is required by regulation or because the incremental cost of emitting CO_2 exceeds the cost of capturing and storing it. There are few, if any, markets worldwide where it is clear on what timescales CO_2 capture will be widely implemented. Also, the pressure to move towards capture is expected to be greater in certain markets (with given political and economic drivers) than in others. The developers of a project in a particular market will need to give consideration to the timescales that are likely to apply given local conditions. In some markets it is possible that a retrofit would be required relatively early in a plant's life (perhaps within the first five years of operation), whereas in other markets, the timescale for deployment might be considerable longer. However, the staged construction against fixed deadlines of a capture plant that operates for a short initial period without capture is likely to lead to quite a different technical solution to a capture-ready plant where uncertainty exists as to timing and technology options for a later retrofit.

Overall, the longer the time between the commissioning of a plant and the retrofit of capture technology, the less likely it is that significant pre-investment will be financially advantageous since both technology developments and financial depreciation will tend to reduce the value of that investment.

11.4. Methodology for Assessing Pre-investment in Capture-Ready Technologies

For pre-investment in a capture-ready plant to be cost-effective, it must offer the prospect of having a lower through-life cost than an alternative plant which is built without pre-investment to ease capture. In general, a capture-ready plant will initially be more expensive, in terms of capital cost, operating cost, or both in the expectation that, after the retrofit is made, costs can be reduced, through the minimisation of additional capex, reduction in down-time during implementation or increased efficiency or output of the retrofitted plant.

The cost effectiveness of pre-investment is clearly a function of a range of parameters. For both the 'pre-investment' and baseline cases it is necessary to consider:

- Plant efficiency without capture
- Plant efficiency with capture
- Cost of fuel
- CO_2 emission rate
- Cost of CO_2 emissions.
- Time before capture is implemented
- Time required to fit capture
- Plant capacity before capture
- Plant capacity after capture
- Plant capex
- Plant opex.
- Discount rate.

A spreadsheet tool has been developed to assess these impacts and use them to assess the economic impact of pre-investment.

The spreadsheet model considers the income flow from the different scenarios based on the input range of financial and performance parameters.

The basic model employed to calculate these was developed by the IEA in previous studies. This considers the range of cost and revenue streams associated with a plant given its efficiency, power produced for sale and various other cost parameters.

The modelling approach used here has been to effectively build four models for each scenario.

1. Pre capture operation - with design modifications to facilitate capture
2. Pre capture operation - no design modifications
3. Post capture operation - after design modifications had been in place
4. Post capture operation - no design modifications.

The prime inputs in each case are the power produced, the efficiency of the system and the capital and operating costs of the plant. Where the latter are known, they may be entered by the user as functions of time - if not they may be defaulted to be constant with time during the plant operation. For the current cases, costs have been assumed constant with time. Also a constant price of power (around $60/MWh) has been assumed with time but a profiled price with time could easily be included. Clearly the price of power will vary from market to market and this will be a key factor in determining relative economics of different technology options in different economies.

Each of these cases will have its own cost and revenue stream through time, readily calculated by the spreadsheet. We can then construct a fifth spreadsheet which compiles composite cost curves for any two configurations which we want to compare. The base-case curve is constructed by using the 'base-case pre-retrofit'

revenue stream until the year when the retrofit is carried out, at which point the cost of the retrofit is incurred, production stops for a period, as defined by the user, so that the revenue stream is interrupted and then, at the completion of the retrofit, the revenue stream switches to the 'base-case post-retrofit' stream. A similar approach is used to compute the revenue curve for the alternate scenario.

The two streams are adjusted to net present value (NPV) by applying a discount rate to convert future revenue streams to their present value. This generates two different revenue stream curves, as illustrated in Figure 11.1.

The data modelled here is from Rutkowski et al. 2003[41] for an IGCC-based system. The pre-investment scenario in that case includes an oversized gasifier and ASU which, post-conversion, allows additional power to be produced, at the expense of higher initial capital costs and marginally increased opex before conversion. The cost and performance data for these cases have already been included in this report as Table 5.1.

Figure 11.1 Impact of Pre-investment on NPV

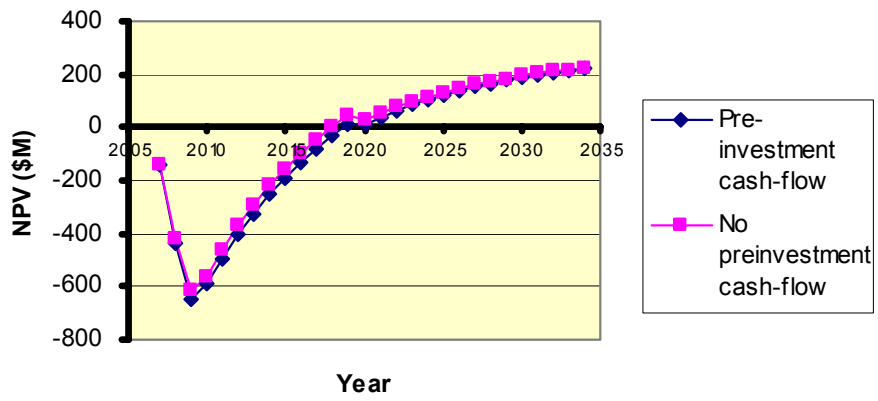

The curves both illustrate similar features. The cost of construction is spread over a number of years leading to a significantly negative initial NPV and then, as the plant comes online and starts to generate power and revenue, the NPV rises according to the amount of power produced and the operational costs of the plant.

The graphs illustrate a retrofit of capture at a future date (in the case of this figure, assumed to be in 2020) where there is a discontinuity in each curve as the model accounts for loss of production revenue, cost of retrofit and the switch to a new revenue stream.

It is clear from inspection of this figure that the two curves are of very similar form for this example and it is therefore also useful to present the data in the form of a ΔNPV, i.e. the NPV for one case minus the NPV for the alternate scenario. In the following graphs, these are generally presented as (NPV of plant with pre-investment - NPV of plant with less pre-investment).

[41] Rutkowski, M., Schoff, R., Holt, N. and Booras, G., 2003, *Pre-Investment of IGCC for CO_2 Capture with the Potential for Hydrogen Co-Production*, Gasification Technologies 2003, San Francisco, CA, October 12-15, 2003. (http://www.gasification.org/Docs/2003_Papers/29RUTK_paper.pdf)

Figure 11.2 illustrates the same data as Figure 11.1 but presented on a ΔNPV basis. The figure illustrates some of the typical features of cash-flow for cases featuring pre-investment in capture.

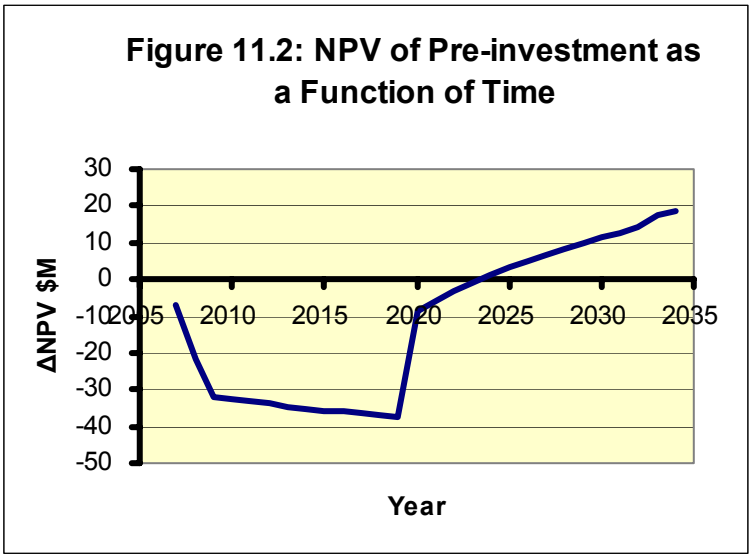

The figure plots the NPV as a function of time from the present day through 2020, when a retrofit is assumed to take place, through to 2034, when the plant has been operational for 25 years. In the years of construction, the NPV of the plant with pre-investment is significantly lower than the plant without pre-investment. In this case, less capital is being spent on the latter scenario. In subsequent years, before the retrofit, the plant economics are slightly worse for the plant with pre-investment and the NPV comparison grows slightly worse each year.

In the retrofit year, the economics improve markedly as (a) the retrofit cost is reduced and (b) the retrofit time is also reduced, meaning that the plant is operational (and generating revenue) for more of that year. [Note the original paper does not specify the required time for retrofit for the two scenarios so these have been estimated as 0.4 and 0.8 of a year, respectively for the pre-investment and reduced pre-investment case. The sensitivity of the economics to these assumptions is assessed below].

In subsequent years, the additional output available from the plant with pre-investment means that it generates more income and the NPV improves year-on-year. In the particular example illustrated, the NPV becomes positive (i.e. the pre-investment pays off) around four years after the retrofit.

It should be stressed that this conclusion is sensitive to a number of assumptions. For example, for the figures presented in Figures 11.1 and 11.2, a discount rate of 7% was assumed. The payback time is sensitive to this assumption as illustrated in Figure 11.3, which shows the NPV plots for the same case as Figure 11.2, but for a range of discount rates from 7% to 10%. It is clear that, as the discount rate increases, and hence the future value of money decreases, then pre-investment becomes less advantageous so that, for a discount rate of 10%, the NPV of the pre-investment never becomes positive, i.e. the pre-investment is not worthwhile.

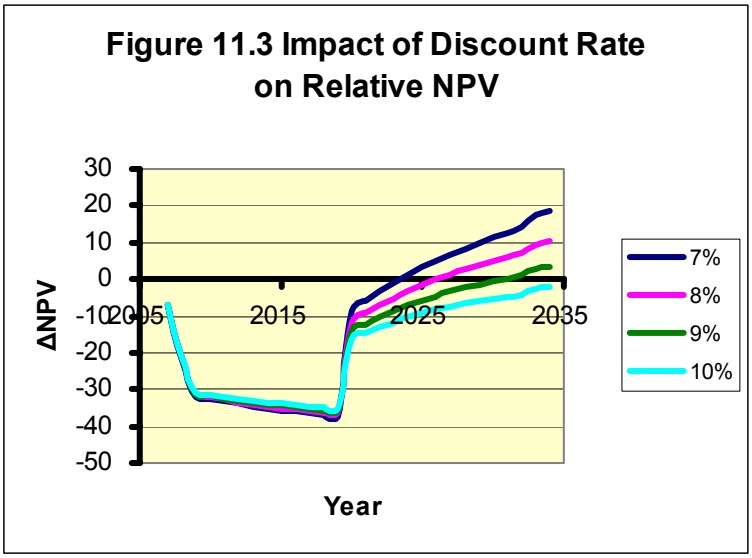

The appropriate discount rate will vary from market to market and for different types of business within a given market and thus it is not possible to comment on which of the scenarios in Figure 11.2 is most realistic. The more valid assessment is that all are realistic given different local drivers, so that in some markets it would make economic sense to make this pre-investment, whereas in others the pre-investment would not be justified.

The analysis above includes an assumed benefit from plant pre-investment of a reduced time for retrofit. The original paper does not quantify a retrofit period for either the pre-investment or the non-pre-investment case. The graphs above assume a period of 0.4 of a year to retrofit the case with pre-investment and 0.8 for a year without retrofit. These parameters are rough estimates as to what might represent reasonable timescales but clearly the overall economics will be sensitive to the values used for each of these. As an example we can plot (for a 10% discount rate) the impact of varying the time to retrofit in the non pre-investment case.

Figure 11.4 illustrates the impact on through-life NPV (i.e. the NPV after 25 years' service) of assuming that the time to retrofit varies from 0.4 years (i.e. the same as the no-pre-investment case) to 0.8 years as in Figure 11.2. Clearly as the timescale for retrofit decreases for the non-pre-investment case, the relative benefit of the pre-investment decreases and the graph illustrates that if this time fell from 0.8 to 0.4 of a year the impact is a reduction of relative current NPV by around $12M.

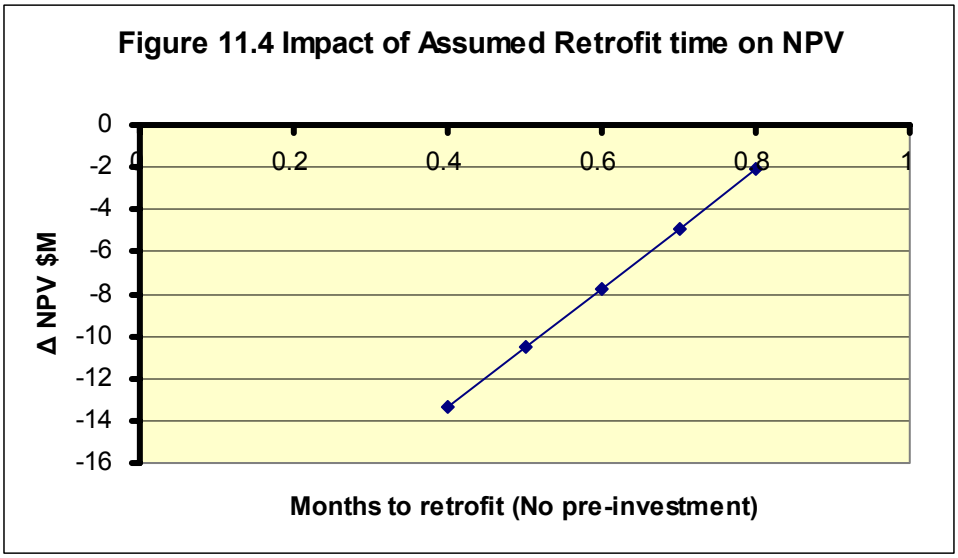

Another key factor in determining the financial attractiveness of pre-investment is the time to retrofit. Clearly, pre-investment will be more attractive if retrofit is made earlier and the benefits of the pre-investment are recouped earlier when the value of money is greater. The higher the discount rate, the greater is the benefit to accrue from early deployment. This is illustrated in Figure 11.5 which shows the impact of years to retrofit and discount rate on ΔNPV (after 25 years) for three different discount rates, 6, 8 and 10%.

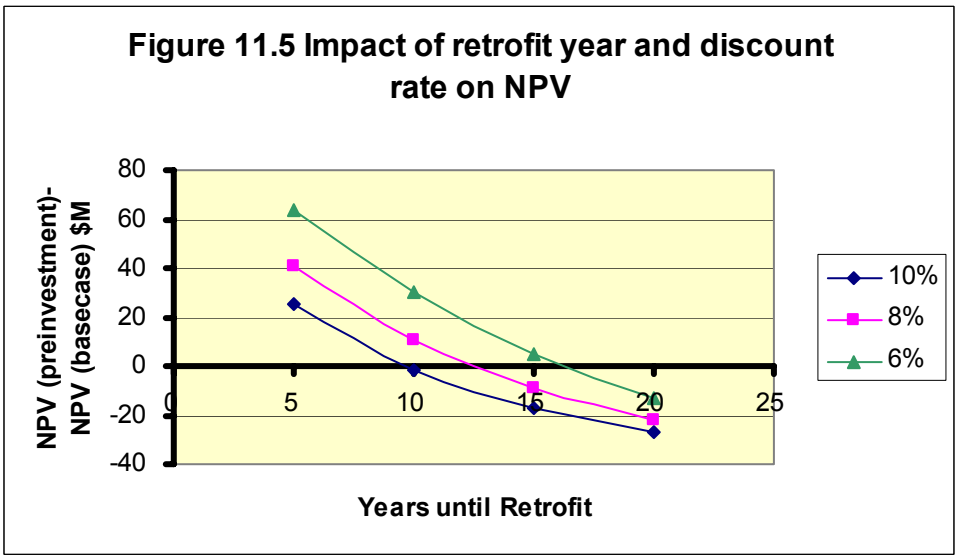

For this particular scenario, this graph shows that benefit for pre-investment is achieved for all the discount rates if the retrofit is made 5 years after commissioning but it is not beneficial for any of the rates if the retrofit is delayed for 20 years. For the intermediate time periods the attractiveness of the pre-investment is sensitive to the discount rate used.

All of these financial analyses are also clearly fundamentally dependent on the base assumptions for the capital and operating costs of CO_2 capture systems. Thus while the tool here may be used to identify the financial implications of different investments, the efficacy of the results will depend on the accuracy of the cost data used. It is for this reason that a number of companies are now investing significant

funds (in FEED studies) to more accurately understand the financial implications of the options available to them. Thus, the preceding results should be regarded as illustrative of some of the sensitivities which will apply to pre-investment assessment. It is important that, as more detailed cost estimates emerge from FEED studies for each of the capture technologies, that the financial analyses are updated to provide further insights into the optimum pre-investment strategy.

The results above are for an IGCC-based system, but the methodology is also easily applicable to the other technologies. Calculations have been carried out for two of the PC-based technologies. For post-combustion capture, the economics of cases 1/1A and 3/3A (as described in Section 7 of this document) have been examined as an illustration of the economic impact of a significant level of pre-investment.

For an oxy-fuel based example, evaluations have also been carried out for Cases 5/5A and 6/6A, (as described in Section 8, above) representing a base-case and an oxyfuel plant with a small amount of pre-investment to promote capture-readiness

The scenarios examined are summarised in Table 11.1 below.

Table 11.1 Summary of model Test Cases

	MW net	Capital Cost to build ($M)	Non-fuel Opex before capture ($M pa)	Efficiency without capture (%)	Time to Convert to Capture (Years)	MW net	Capex to convert Capture ($M)	Non-fuel Opex with capture ($M pa)	Efficiency with Capture (%)
IGCC Base case [42]	509	590	24.6	35.4	0.4-0.8	425	88.3	25.6	29.5
IGCC Oversized ASU & Gasifier	509	620	26.5	35.4	0.4	449	68.3	26.8	29.5
Post Combustion Scrubbing (Case 1/1A)	867	1410	55	45.3	0.8	643	332	74	33.6
Post Combustion Scrubbing - with pre-investment. (case 3/3A)	867	1420	55	45.3	0.4	680	310	74	35.4
Oxy-fuel Capture Base (case 5/5A)	679	647	41	44.3	0.4-0.8	535	476	46	35.6
Oxyfuel with some pre-investment (case 6/6A)	679	650	41	44.3	0.4	535	471	46	35.6

From inspection of Table 11.1, it is clear that the projected output from the plant in Case 3/3A is significantly greater than for the Case1/1A scenario and that the costs of achieving this are relatively modest. It is not surprising, therefore that this scenario presents a rapid payback, virtually as soon as the retrofit is made, as illustrated in Figure 11.6.

Any pre-investment options such as this which can be identified for any of the technologies are clearly worthy of serious consideration and should be prioritised in assessing the most attractive options for pre-investment.

[42] [42] Rutkowski, M., Schoff, R., Holt, N. and Booras, G., 2003, *Pre-Investment of IGCC for CO_2 Capture with the Potential for Hydrogen Co-Production*, Gasification Technologies 2003, San Francisco, CA, October 12-15, 2003. (http://www.gasification.org/Docs/2003_Papers/29RUTK_paper.pdf)

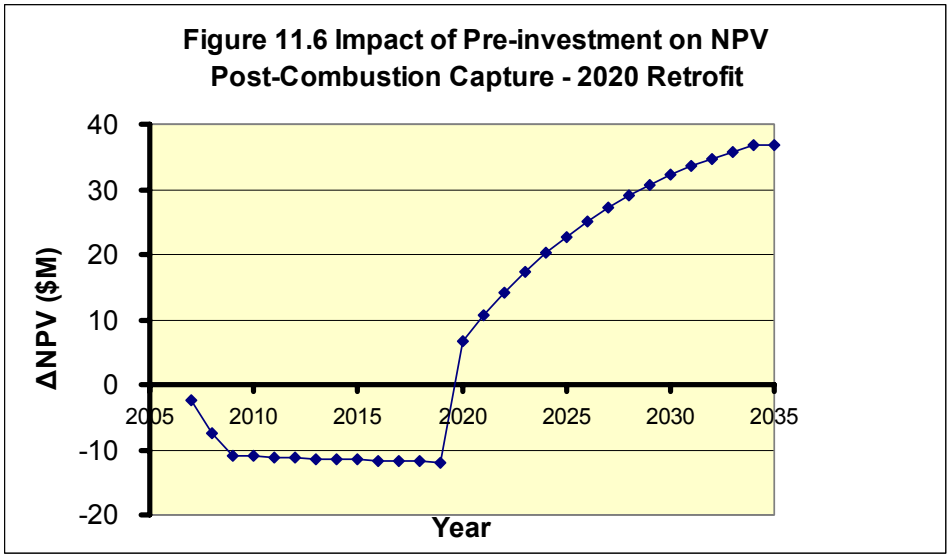

In contrast, it is clear from inspection of the economic figures in Table 11.1 that the performance of the technology under the two scenarios, both technically and in efficiency terms, is very similar. Accordingly, a critical parameter becomes the relative time to retrofit the technology under the two scenarios. Figure 11.7 shows the impact on NPV of a range of different assumed times to retrofit the technology. The estimation of retrofit time lies outside the scope of this report but, if we assume (as for the IGCC case) that 0.4 years is a reasonable estimate for retrofit to a plant which has made a modest pre-investment in retrofit, we can examine the sensitivity of the analysis if we vary the retrofit time assumed for the retrofit of the base-case from 0.4 years (i.e. no penalty) to 0.8 years.

These results are presented in Figure 11.7. Essentially, these show that, in this particular instance, unless there is a significant reduction in the time to retrofit from the pre-investment, then there is no economic driver to do it, in fact there is an economic disincentive. However, if the retrofit period can be significantly reduced, there can be a clear economic driver to make that expenditure.

Overall, it can be concluded, even from the restricted number of analyses included here that the spreadsheet modelling approach adopted here can be a useful tool in exploring future economic implications of investment scenarios and that (as illustrated by the IGCC example) that the attractiveness of different pre-investments will be sensitive to both economic factors (e.g. the appropriate discount rate) and to the assumed time before retrofit.

The analyses carried out for the PC-based systems illustrate that some investments which deliver marked improvements in plant efficiency or output post-conversion may be economically attractive (as would be expected) but also that investment which does not deliver significant performance improvement, but which reduces the time required to retrofit, may also be worthwhile.

It is recommended that this approach to economic analysis be used as a rapid method to re-assess economics as more detailed cost estimates for all of the technologies become available.

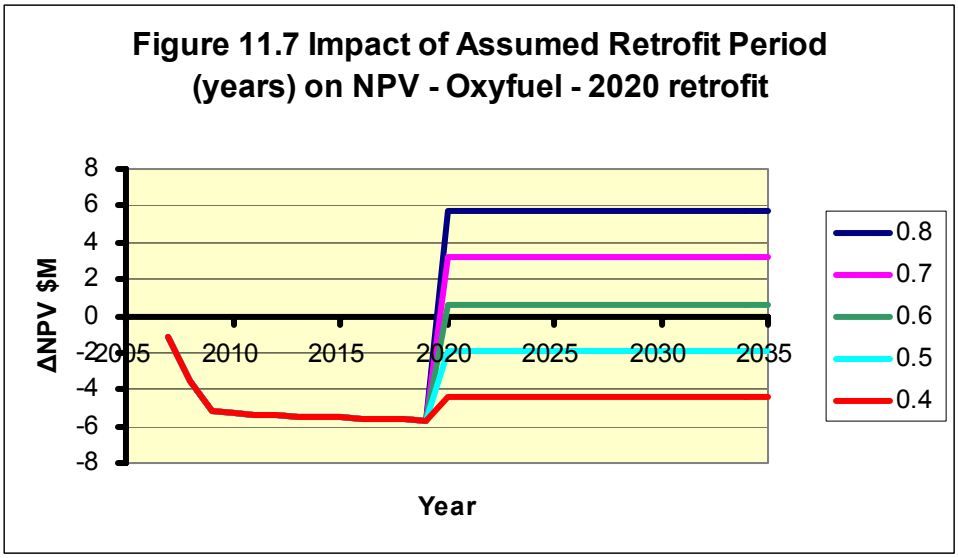

Although NPV methods using discounted cashflow analysis, such as that used in this spreadsheet, are widely used and provide a clear set of assumptions to generate conclusions, it should also be noted that the literature suggests that NPV methods do not accurately value flexibility in investment decisions, such as the variable timing of retrofit of CO_2 capture to a capture-ready plant. Thus, initial results obtained using this spreadsheet should be supplemented by other analysis before investment decisions are made. One such analysis, based on the real options approach, has been applied to capture readiness by Sekar of MIT [43].

[43] R.C. Sekar, *Carbon Dioxide Capture from Coal-Fired Power Plants: A Real Options Analysis* MSc Thesis MI, June 2005

12. CONCLUSIONS & RECOMMENDATIONS

- This document has reviewed existing published work on capture-ready plants and summarised the technical options to allow capture to be retrofitted to plant once it has been built.
- The key elements to ensure that a plant is capture-ready are that there should be:
  - A clearly identified strategy by which a credible capture technology can be fitted to the plant
  - Space available both within and around the plant to permit the capture technology to be fitted
  - A credible route for captured CO_2 to be removed from site and sent to storage
- For supercritical PF plant, the most developed capture retrofit options are post-combustion amine capture and oxy-fuel combustion. The large amount of background knowledge on PF technology has allowed the implications of these retrofit technologies to be examined in some detail in this document and equipment descriptions, cost and performance estimates have been developed for both capture technologies.
- Because a recent review by IEA GHG has assessed the capture options form gas-fired plant in detail and found the costs to be generally high in comparison to capture from coal, this report has not considered those options in detail.
- The basic principle of capture retrofit to IGCC is through the application of a shift reactor, CO_2 separation plant and the provision of a modified gas turbine and the implications of these for plant operation have been discussed in generic terms.
- The configuration of the optimum capture plant will also, for IGCC, depend on the choice of the gasifier, the GT and the acid gas removal system. Therefore whilst it has been possible to refer to a small number of studies in the literature that have considered capture-ready options for individual IGCC configurations, it should be stressed that other options will exist for different plant configurations.
- For the coal-based technologies (IGCC or PF with post-combustion capture or oxy-fuel), optional capture-ready pre-investments been identified.
- Some technological options, such as readily expandable systems (e.g. control, fire, compressed air), and readily upratable equipment (ID fans, cooling water pumps) are very low cost and should be implemented in plants contemplating the future fitting of capture. Similarly the provision of 'pipe-runs' (where future piping could be installed to access existing equipment) should be considered and implemented. For post-combustion amine capture, a flue gas desulphurisation system capable of being upgraded to meet the ultra-low levels required during CO_2 capture should be considered.
- Estimation has been made of the impacts on performance and capital and operating costs of pre-investments, and the savings in subsequent retrofit costs.
- A spreadsheet tool has been developed to allow an assessment of the trade-off between pre-investment and subsequent savings for a range of different factors, including the time from plant construction to retrofit, the discount rate, fuel costs, plant efficiency and time to retrofit. The spreadsheet is to be made available to IEA Greenhouse Gas funders to help stakeholders to assist them with their own assessment of identify any worthwhile capture-ready investments for their own circumstances.
- The application of the model has shown that the economics of retrofit can be critically dependent on the time before retrofit, the discount rate used, the time to make the retrofit and the relative performance before and after retrofit. Dependent on the parameters selected, pre-investment is sometimes justified and, at other times, not. The tool can be

used by stakeholders to assess the attractiveness of pre-investment based on their own economic parameters and their own perception of their market and local costs.

- It is therefore recommended that, as financial data becomes more readily available, and the performance of the various candidate technologies more clear (particularly as projects develop to the FEED stage and the data comes into the public domain) that the analytical approach outlined in this document may be used with advantage to re-examine those economics in coming years.